PowerPact™ B Multistandard

Catalogue 2017
Circuit breakers from 15 to 125 A

schneider-electric.com

Life Is On | Schneider Electric

Green Premium™

Endorsing eco-friendly products in the industry

Green Premium™
Product

Green Premium is the only label that allows you to effectively develop and promote an environmental policy whilst preserving your business efficiency. This ecolabel guarantees compliance with up-to-date environmental regulations, but it does more than this.

Over 75% of Schneider Electric manufactured products have been awarded the Green Premium ecolabel

Discover what we mean by green ….

Check your products!

Schneider Electric's Green Premium ecolabel is committed to offering transparency, by disclosing extensive and reliable information related to the environmental impact of its products:

RoHS

Schneider Electric products are subject to RoHS requirements at a worldwide level, even for the many products that are not required to comply with the terms of the regulation. Compliance certificates are available for products that fulfil the criteria of this European initiative, which aims to eliminate hazardous substances.

REACh

Schneider Electric applies the strict REACh regulation on its products at a worldwide level, and discloses extensive information concerning the presence of SVHC (Substances of Very High Concern) in all of these products.

PEP: Product Environmental Profile

Schneider Electric publishes complete set of environmental data, including carbon footprint and energy consumption data for each of the lifecycle phases on all of its products, in compliance with the ISO 14025 PEP ecopassport program. PEP is especially useful for monitoring, controlling, saving energy, and/or reducing carbon emissions.

EoLI: End of Life Instructions

Available at the click of a button, these instructions provide:

- Recyclability rates for Schneider Electric products.
- Guidance to mitigate personnel hazards during the dismantling of products and before recycling operations.
- Parts identification for recycling or for selective treatment, to mitigate environmental hazards/ incompatibility with standard recycling processes.

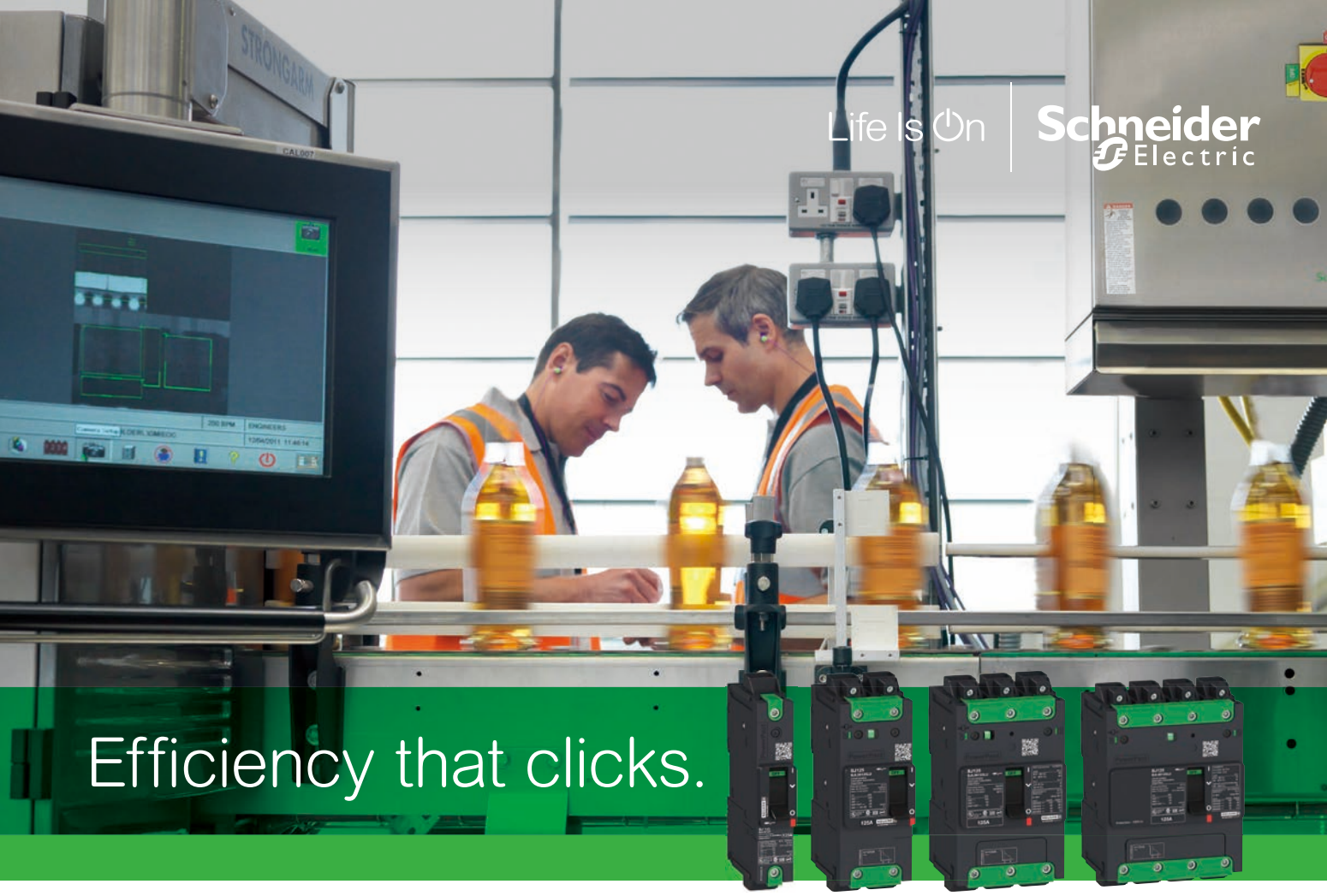

Efficiency that clicks.

PowerPact B Multistandard circuit breakers

Schneider Electric introduces a new family member of the PowerPact™ Multistandard range of circuit breakers, the 125 A PowerPact B.

The PowerPact Multistandard range benefits from 100 years of Schneider Electric's background and leadership in industrial circuit breakers based on roto-active breaking technology.

As well as offering proven performance, flexibility, and reliability, the PowerPact B features new innovations such as EverLink™ patented connections and integrated DIN rail-mounting capability.

Production of fuses in cases and fuse switches in boxes	FA circuit-breaker launch	Square D 100th anniversary	PowerPact Multistandard range H/J/L	New PowerPact B Multistandard
	SQUARE D by Schneider Electric			
1903	1965	2003	2011	2016

schneider-electric.com/powerpactb

Your efficiency is our first concern.

I design and build machines.

Optimize your solution.

- Best combination of size and performance
- Same footprint, accessories, and auxiliaries for both multistandard (UL/IEC) and IEC range
- Benefit from working with one single worldwide equipment provider (PowerPact, TeSys™, Altivar™, Modicon™, etc.)

PowerPact B offers a flexible platform to meet customer needs for many types of applications.

Built-in DIN rail and plate-mounting capabilities make installation a snap. Multiple field-installable power connections and accessories allow for easy adaptation at any time. Just click it in!

Applications: Designed for machine control and electrical distribution.

PowerPact B Multistandard circuit breakers are equipped with a thermal-magnetic trip unit with a fixed tripping threshold. They are available with three levels of breaking capacity: 18, 35, and 65 kA at 480 volts and in 1-, 2-, 3-, and 4-pole constructions to protect most applications.

They feature a new premium terminal with patented EverLink technology, and have a wide range of accessories, including a variety of rotary handles.

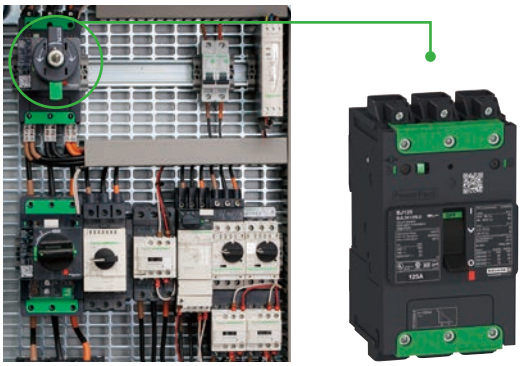

(81 mm wide for a 3 pole). Feeder protection and circuit disconnect solutions.

PowerPact B circuit breakers: Optimized for your needs

Multistandard PowerPact B circuit breakers are a 125 A molded-case circuit breaker solution offering great performance in a compact frame size. PowerPact Multistandard circuit breakers are a Schneider Electric global offering of UL listed, CSA, IEC, CCC, and EAC circuit breakers.

PowerPact B main features and innovations:

- Up to 125 A and 100 kA
- Fixed thermal-magnetic trip unit integrated
- Auxiliaries externally visible
- EverLink connectors
- Built-in DIN rail and plate mount
- A variety of operating mechanisms

EverLink patented technology

The PowerPact B features a new cable connection method with patented creep-compensating technology built directly into the terminal — EverLink:

- With EverLink connectors, save space and time during panel assembly. EverLink technology compensates for the loosening of cables over time.
- Bare cable connections are as safe as compression lug ones, including fine stranded cable.

More than 35 new patents were registered for PowerPact B.

Installation Tightening Over time

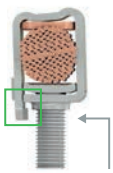

Space for spring effect
Untightened

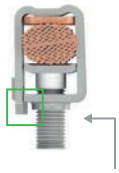

In contact
Tightened

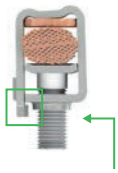

Creep-compensating effect

Spring maintains contact pressure:
Creep compensation

Efficiency that clicks.

PowerPact B accessories are available to answer all your needs from power connection to operating mechanism, including electrical auxiliaries. All of them are easily field installable.

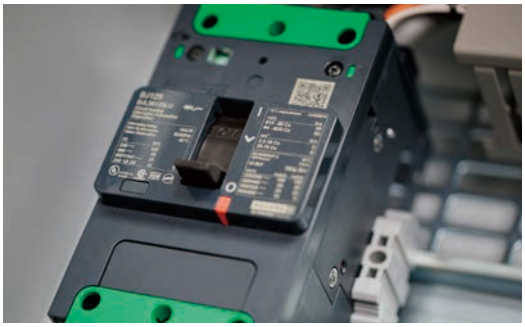

Mounting: DIN rail and plate

Embedded DIN rail- and plate-mounting capabilities for every circuit breaker; no extra parts required.

Auxiliaries: Field-installable offer

All electrical auxiliaries (contacts OF/SD and voltage release MN/MX) can be easily installed in the product by simply opening the front cover and snapping them into cavities.

Their presence in the breaker is externally visible through flags or a window.

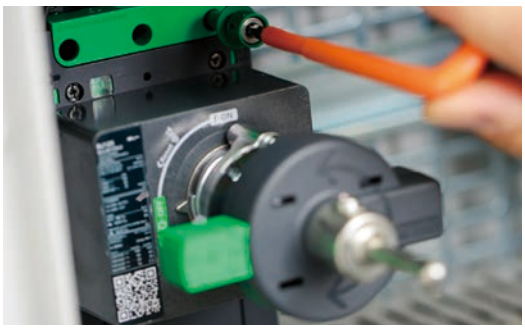

Power connection: Flexible

PowerPact B circuit breakers come with EverLink or compression lug or busbar connector. As an option, you can get EverLink connectors with control wire terminal.

New torque-limiting breakaway bits can be used to tighten power connections in the field.

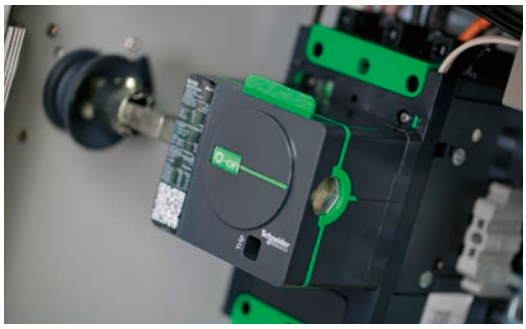

A wide range of operating mechanism

A wide range of rotary handles enables the PowerPact B to meet all standards and applications. They are available as direct, extended, and side mount. We also feature an open door shaft operator (NFPA79 code), which allows you to operate the breaker safely when the panel door is open.

Reference	Three levels of breaking capacities		
	240 V AC	480 V AC	600Y/347 V AC
BD	25 kA	18 kA	14 kA
BG	65 kA	35 kA	18 kA
BJ	100 kA	65 kA	25 kA

Reference	Power terminals
F	Terminal nut both ends
L	EverLink lugs

Reference	Number of poles	
3	1 – 1P	3 – 3P
	2 – 2P	4 – 4P

Reference	Voltage
6	6 – 600 Y/347 V

Reference	Current range			
125	015 = 15 A	035 = 35 A	070 = 70 A	110 = 110 A
	020 = 20 A	040 = 40 A	080 = 80 A	125 = 125 A
	025 = 25 A	050 = 50 A	090 = 90 A	
	030 = 30 A	060 = 60 A	100 = 100 A	

Reference	Connectors type
LU	EverLink 2P, 3P, and 4P with control wire termination (CWT)
	EverLink 1P – no CWT

PowerPact B circuit breakers: Select and order

1 Design

Multistandard certification

One design for the world, wherever you ship your equipment, the circuit breaker is UL listed and, CSA, IEC, CCC, and EAC certified.

CAD Library

Get quick access to all 2-D and 3-D models to easily design your control cabinet.

2 Configure and order

MyPact

Configure and order PowerPact B to save time and ensure accuracy.
config.schneider-electric.com

3 Build

Build faster

One-click installation with the embedded DIN rail and flexibility with field installable accessories and auxiliaries.

4 Operate and maintain

Get quick access to product information

Auxiliaries are externally visible. Scan the QR code to get information on the product and quick access to the customer care center.

Ensure continuity of service

With EverLink, no need for periodic retightening of terminals.

General contents

PowerPact B Multistandard

Functions and characteristics A

Installation recommendations B

Dimensions C

Wiring diagrams D

Additional characteristics E

Catalogue numbers and order forms F

Glossary G

Functions and characteristics

A

Introduction

PowerPact B Multistandard circuit breakers overview..... A-2
Characteristics and performance..... A-6
Trip units A-8
Installation A-9

Accessories and auxiliaries

Overview A-10
Power connections..... A-12
Insulation of live parts..... A-14
Selection of electrical auxiliaries A-15
Indication contacts..... A-16
Remote tripping A-17
Rotary handles..... A-18
Locks and sealing accessories A-20

Other chapters

Installation recommendations B-1
Dimensions C-1
Wiring diagrams..... D-1
Additional characteristics E-1
Catalogue numbers F-1
Glossary G-1

Introduction

PowerPact B Multistandard circuit breakers overview

A

PB114874_L32.eps

Introduction

■ The PowerPact Multistandard circuit breakers are designed and certified to multiple standards in order to meet the needs of customers who have global designs or build and sell in various standard regions. One product can be used and sourced globally. B-frame circuit breakers have the smallest footprint in the PowerPact family of products.

■ PowerPact B-frame circuit breakers are designed to protect electrical systems from damage caused by overloads and short circuits. They are available with thermal-magnetic trip units from 15 A to 125 A, with a breaking capacity up to 65 kA at 480 V AC.

■ The B-frame product offers a flexible platform in which customer needs for various types of mounting and terminations can be accommodated with simple alterations of the base product. Field installable features empower the customer to configure the product to their exact needs for control panel or power panel applications.

■ B-frame circuit breakers with thermal-magnetic trip units contain individual thermal (overload) and instantaneous (short circuit) sensing elements in each pole. The amperage ratings of the thermal trip units are calibrated at 40 °C (104 °F) free air ambient temperature. Per the National Electric Code® (NEC®) and the Canadian Electrical Code, standard circuit breakers may only be applied continuously at up to 80 % of their rating.

Introduction

PowerPact B Multistandard circuit breakers overview

Dual-break rotating contacts

All PowerPact Multistandard circuit breakers are equipped with dual-break rotating contacts that reduce the amount of peak current during a short circuit fault.
This reduces the let-through currents and enhances equipment protection.

Reduced let-through currents

The moving contact has the shape of an elongated “S” and rotates around a floating axis. The shape of the fixed and moving contacts are such that the repelling forces appear as soon as the circuit reaches approximately 15 times In.

Due to the rotating movement, repulsion is rapid and the device greatly limits short-circuit currents, whatever the interrupting level of the unit. The fault current is extinguished before it can fully develop. Lower let-through currents provide less peak energy, reducing the required bus bar bracing, lowering enclosure pressure, and delivering improved series or combination ratings.

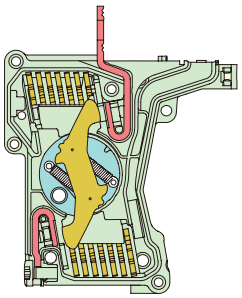

DB419674.eps

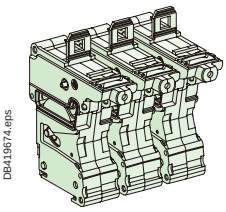

DB419675.eps

Internal operating mechanism

PowerPact Multistandard circuit breakers have an over-center toggle mechanism providing quick-make, quick-break operation. The operating mechanism is also trip-free, which allows tripping even when the circuit breaker handle is held in the “ON” position.
Internal cross-bars provide common opening and closing of all poles with a single operating handle.
All PowerPact circuit breakers have an integral push-to-trip button in the cover to manually trip the circuit breaker. This should be used as part of a regular preventive maintenance program.

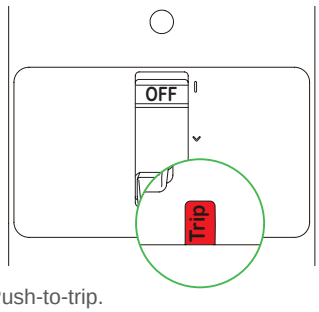

DB419676.eps

Push-to-trip.

Handle position indication

The circuit breaker handle can assume any of three positions, ON, tripped or OFF as shown.
The center tripped position provides positive visual indication that the circuit breaker has tripped.
The circuit breaker can be reset by first pushing the handle to the extreme “OFF” position. Power can then be restored to the load by pushing the handle to the “ON” position.

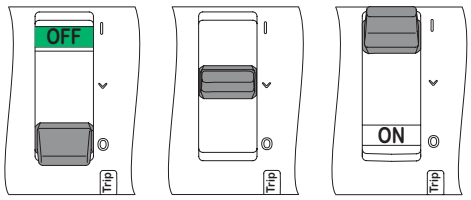

DB418565.eps

OFF position Tripped position ON position

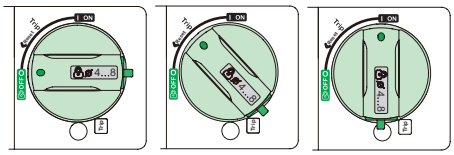

DB423009.eps

OFF position Tripped position ON position

Introduction

PowerPact B Multistandard circuit breakers overview

A

DB419673.eps

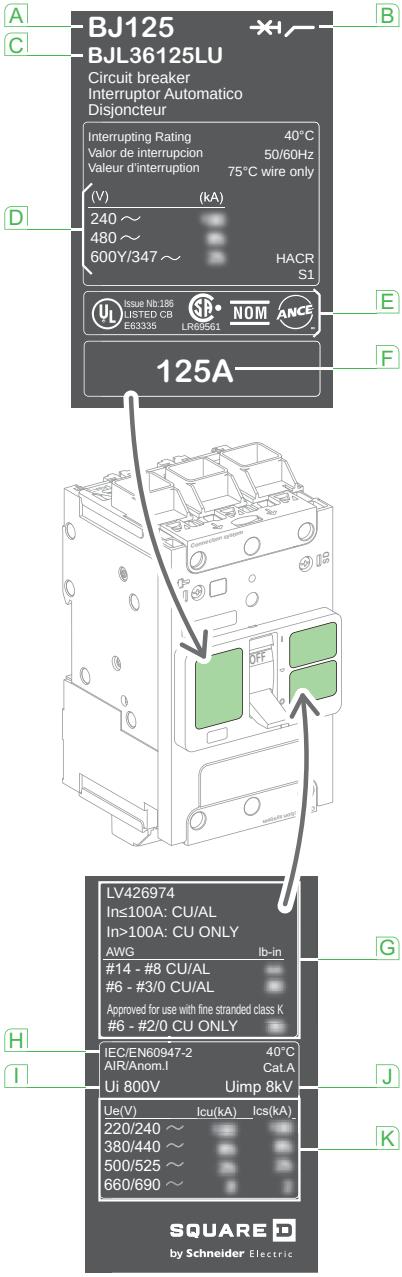

Note: when the circuit breaker is equipped with an extended rotary handle, the door must be opened to view the faceplate.

Characteristics indicated on the faceplate label:

- A Circuit breaker type
- B Circuit breaker symbol
- C Commercial reference
- D UL interrupting rating
- E Certification marks
- F Circuit breaker rating
- G Termination characteristics
- H Reference standard
- I Ui: rated insulation voltage
- J Uimp: rated impulse withstand voltage
- K IEC interrupting ratings:
  - Icu: ultimate breaking capacity,
  - Ics: service breaking capacity, depending on the operating voltage Ue.

Codes and standards

B-frame circuit breakers are manufactured and tested in accordance with the following standards.
Note: apply circuit breakers according to guidelines detailed in the National Electric Code (NEC) and other local wiring codes.

Standards and certifications marks

PowerPact B Multistandard circuit breakers
UL 489 [1]
CSA C22.2 No. 5 [2]
NMX J-266
IEC/EN 60947-2
IEC/EN 60947-5-1
GB 14048-2
CCC
EAC
NOM
CE Marking

[1] PowerPact B-frame circuit breakers are in UL File E63335.
[2] PowerPact B-frame circuit breakers are in CSA File 177007.

Marine type approval certification
PowerPact B circuit breakers comply with most of all marine classification companies specifications, including:

- American Bureau of Shipping (ABS)
- Bureau Veritas (BV)
- China Classification Society (CCS)
- Det Norske Veritas / Germanisher Lloyd (DNV / GL)
- Korean register of Shipping (KROS)
- Lloyds Register of Shipping (LROS)
- Nippon Kaiji Kyokai (NK)
- Registro Italia Navale (RINA)
- Russian Maritime Register of Shipping (RMROS).

Applications

Industrial control panels

PowerPact B circuit breakers are used in industrial control panels.
They serve as an incoming device, branch (feeder circuit) or can be combined with starters to protect motor feeders:

- compliance with worldwide standards including IEC 60947-2 and UL 489 / CSA C22.2 N° 5
- overload and short-circuit protection
- installation in universal and process-specific type enclosures.

The accessories for the PowerPact B circuit breakers are suitable for the special needs of these applications.

Electrical distribution

PowerPact B circuit breakers are also used in electrical distribution for building applications. They can be used as feeder or incomer and are compliant with worldwide standards, providing short-circuit and overload protection.
They are both back-pan / plate and DIN-rail mount, compatible with all kinds of enclosures and offering a whole range of operating handles and accessories.

Grounded B-phase systems (corner-grounded delta)

Circuit breakers suitable for corner-grounded circuits are marked Ø1-Ø3.

Three-phase 240 V AC corner-grounded delta system.

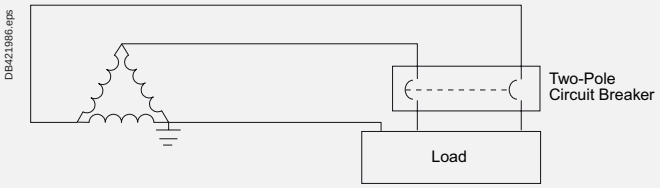

2P Frame			
	BD	BG	BJ
Ampere Rating (A)	15 - 125		
Voltage Rating (V AC)	240		
UL Interrupting Rating (kA)	18	35	65

Introduction
Characteristics and performance

A

PB114863.eps

PB114869.eps

PB114874_L32.eps

PB114877.eps

Circuit breaker ratings

The interrupting rating is the highest current at rated voltage the circuit breaker is designed to safely interrupt under standard test conditions. Circuit breakers must be selected with interrupting ratings equal to or greater than the available short-circuit current at the point where the circuit breaker is applied to the system (unless it is a branch device in a series rated combination). Interrupting ratings are shown on the front of the circuit breaker.

Reverse feeding of circuit breakers

The standard unit-mount Multistandard circuit breakers have sealed trip units and may be reverse fed.

Circuit breaker	
Circuit breaker type	
Number of poles	
Amperage range (A)	
UL 489 circuit breaker ratings	
UL/CSA/NOM (kA rms)	208Y/120 V AC
	240 V AC
	480Y/277 V AC
	480 V AC
	600Y/347 V AC
IEC/EN 60947-2 circuit breaker ratings	
Ultimate breaking capacity (Icu) (kA rms)	220...240 V AC
	380...415 V AC
	440 V AC
	500...525 V AC
	690 V AC
Service breaking capacity (Ics) (kA rms)	220...240 V AC
	380...415 V AC
	440 V AC
	500...525 V AC
	690 V AC
Rated insulation voltage (V)	Ui
Rated implulse withstand voltage (V)	Uimp
Rated operational voltage (V)	Ue
Rated current (A)	In (40 °C)
Utilization category	
Suitability for isolation	
Pollution degree	
Durability operations (Open-Close cycles)	
Mechanical durability [1]	
Electrical durability [1]	240 V AC - In (1P)
	440 V AC - In (2P/3P/4P)
Protection	
Overload/short-circuit protection	Thermal-Magnetic
Dimensions/ Weight / Connections	
Dimensions 3P (unit mount) mm. (in)	Height
	Width
	Depth
Weight 3P - kg (lb.)	
Connections / Terminations	EverLink™
	Crimped lug/busbar
	Optional lugs

[1] Durability (C-O cycles) as per IEC947-1 annex K.

Special Ratings

The B-frame circuit breaker also complies with the following special ratings:

- HACR rating
- SWD switch duty rating (applies only to 15 A and 20 A; 347 V AC or less; 1P, 2P and 3P)
- HID high intensity discharge lighting rating (15 - 30 A; 347 V AC or less; 1P, 2P and 3P).

125 A B-Frame						
	BD		BG		BJ	
	1	2-4	1	2-4	1	2-4
	15-125	15-125	15-125	15-125	15-125	15-125
	25	25	65	65	100	100
	25	25	65	65	65	100
	18	18	35	35	65	65
	-	18	-	35	-	65
	14	14	18	18	25	25
	25	25	65	65	65	100
	-	18	-	35	-	65
	-	18	-	35	-	65
	-	14	-	18	-	25
	-	-	-	-	-	10
	25	25	65	65	65	100
	-	18	-	35	-	65
	-	18	-	35	-	65
	-	14	-	18	-	25
	-	-	-	-	-	2.5
	800					
	8 k					
	240	690	240	690	240	690
	15-125					
	A					
	Yes					
	3					
	15000					
	10000					
	10000					
	◉					
	137 (5.39)					
	81 (3.19)					
	80 (3.1)					
	1.07 (2.87)					
	◉					
	◉					
	◉					

A

PowerPact B-frame thermal-magnetic trip units are factory sealed.

Available trip units

PowerPact Multistandard circuit breakers offer a range of thermal-magnetic trip units. They are designed to open automatically under overload or short circuit.
B-frame thermal-magnetic circuit breakers contain individual thermal (overload) and instantaneous (short circuit) sensing elements
in each pole.

Thermal-magnetic trip units

DB418859.eps

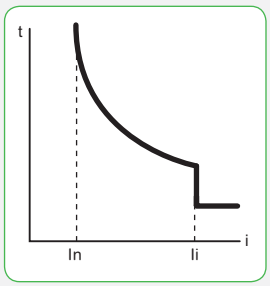

B-Frame Trip Curve
(In) Fixed threshold thermal protection against overload.
(Ii) Fixed threshold instantaneous protection against short-circuits.

Circuit breaker and trip units

Distribution Protection: Thermal-Magnetic TM

DB419677.eps

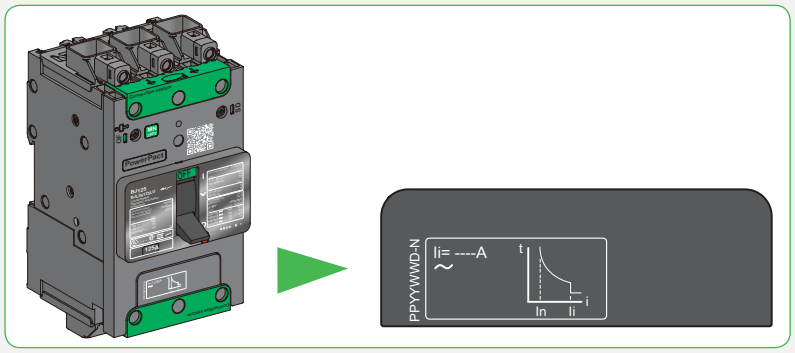

Non-adjustable trip unit

Magnetic level

Ii	Rated current (A)														
	15	20	25	30	35	40	45	50	60	70	80	90	100	110	125
Hold (A)	400	400	400	400	400	400	400	480	640	640	800	1000	1000	1000	1000
Trip (A)	600	600	600	600	600	600	600	720	960	960	1200	1500	1500	1500	1500

Mounting

B-frame circuit breakers may be mounted vertically, horizontally, flat on their back or on their side without any derating of characteristics. These circuit breakers can be mounted on a DIN rail using the integrated 35 mm DIN rail mounting feature.
For backplate mounting, the circuit breakers are supplied with two mounting screws (M4), washers and nuts.
These mounting screws can be inserted through mounting holes molded into the circuit breaker case and threaded into the mounting enclosure, rails or plate.

DB418572.eps

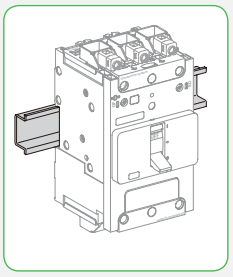

Mounting on DIN rail.

DB418573.eps

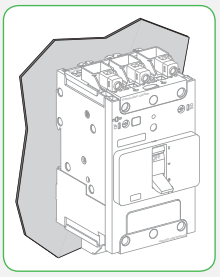

Mounting on backplate
(2 mounting screws).

DB419874.eps

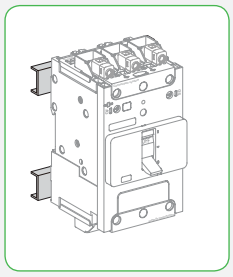

Mounting on rails
(2 mounting screws)

Accessories and auxiliaries

Overview

A

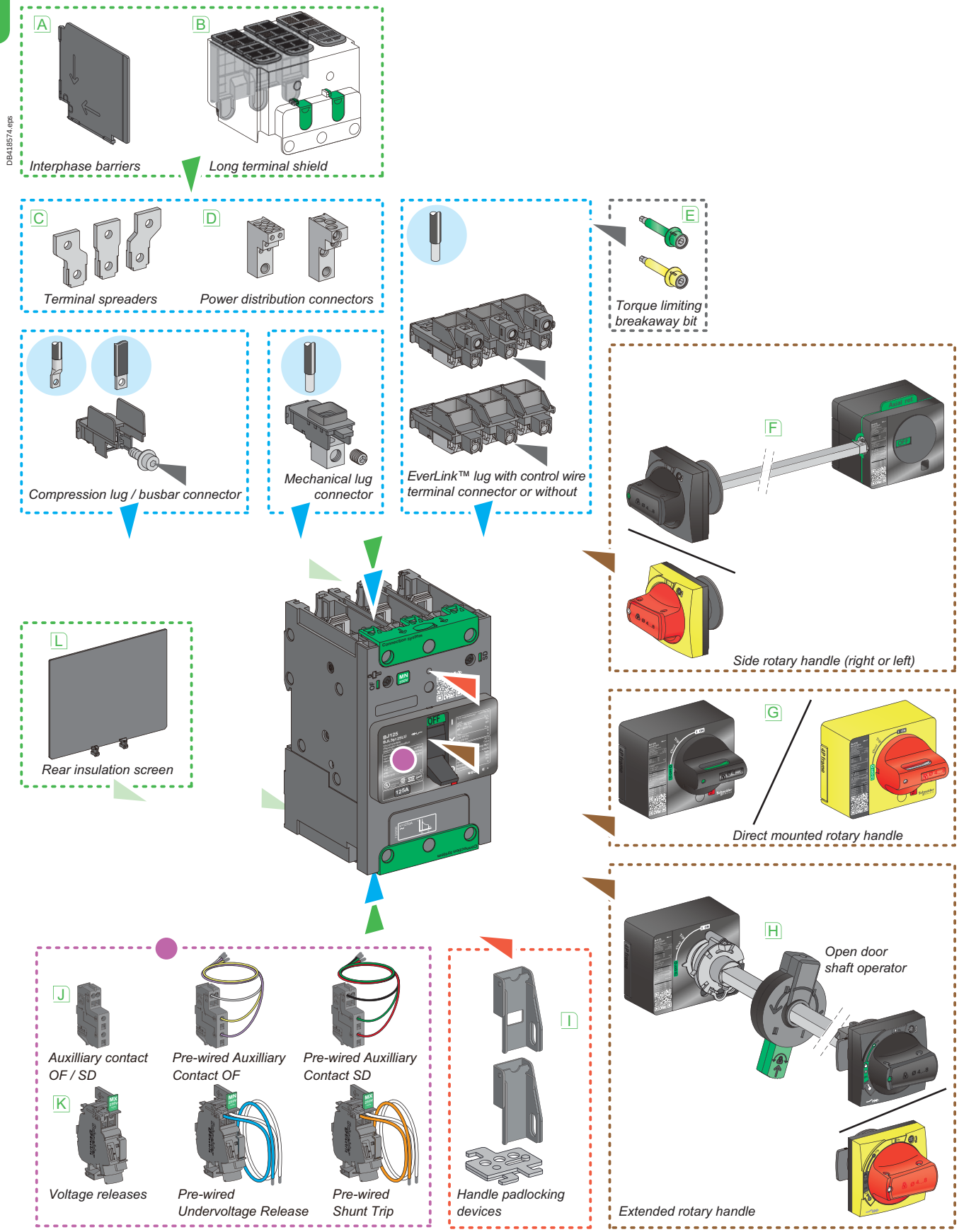

Accessories and auxiliaries

Overview

Accessories overview

PowerPact B circuit breakers offer a whole range of accessories which are field installable, giving the panel builders/customers the chance to modify the circuit breaker at any time in the design/build cycle:

- Power connections, including the patented EverLink lug and control wire terminal feature.
- Electrical accessories, internal to the circuit breaker, with quick snap-in features, spring connections, and wires going out on all four corners of the product.
- Insulation features, providing additional safety precautions between people, equipment and circuit breaker.
- Operating mechanisms, when through the door operation is a must, and including a side mechanism.
- Locking devices, to secure the safety of your personnel or the continuity of service.

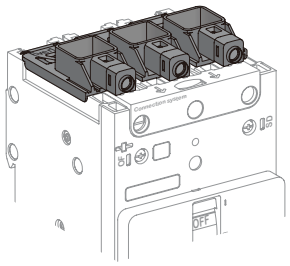

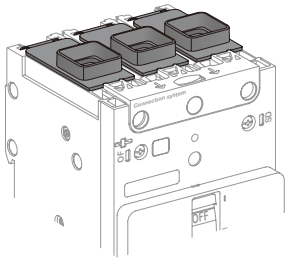

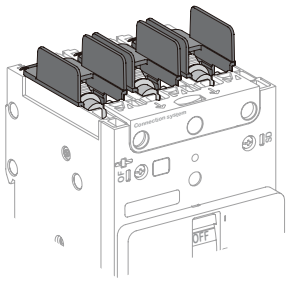

	EverLink with (shown) or without control wire terminal connector				Mechanical lug connector				Compression lug / busbar connector			
	1P	2P	3P	4P	1P	2P	3P	4P	1P	2P	3P	4P
A B	○	○	○	○	○	●	●	●	○	●	●	●
C	○	○	○	○	○	○	○	○	● [1]	● [1]	●	●
D	○	○	○	○	○	○	○	○	●	●	●	●
E	●	●	●	●	○	○	○	○	●	●	●	●
F G H	○	○	●	●	○	○	●	●	○	○	●	●
I	●	●	●	●	●	●	●	●	●	●	●	●
J K	○	● [2]	●	●	○	● [2]	●	●	○	● [2]	●	●
L	○	●	●	●	○	●	●	●	○	●	●	●

[1] By using part(s) of the 3P or 4P spreader kit.
[2] Only OF.

Accessories and auxiliaries

Power connections

A

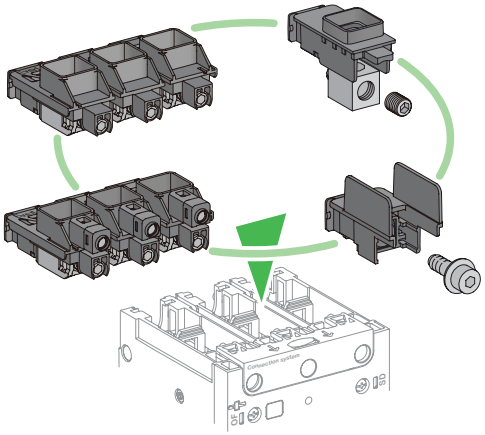
DB419678.eps

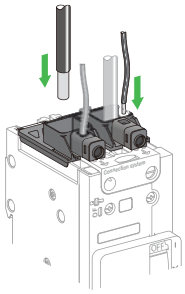
DB419679.eps

2 Poles

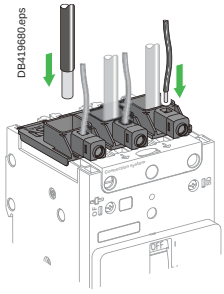
DB419680.eps

3 Poles

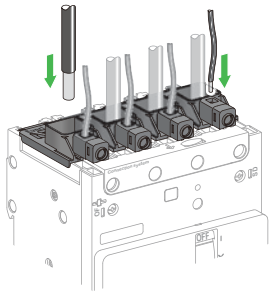
DB419681.eps

4 Poles

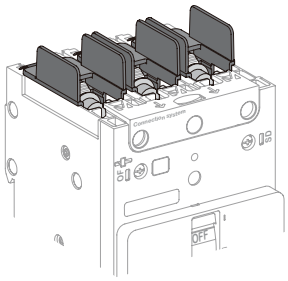
DB418547.eps

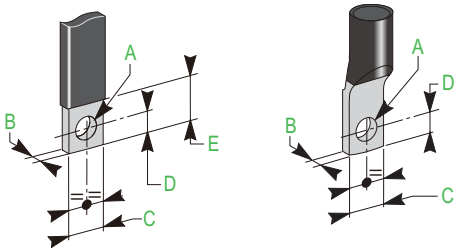

DB418860.eps

Power connection (3 types)

Circuit breakers are delivered with EverLink™ lugs with control wire terminals on the line side and EverLink lugs on the load side (except for single pole circuit breakers which uses EverLink lugs on both sides).
Another factory-assembled power connection option is the terminal nut (for compression lugs / bus bars).
Aluminium mechanical lugs are also available as a kit. All lug options are field installable. So, no matter which lugs are on the product, they can be removed and replaced by any one of the 4 kinds of lugs available (EverLink™ lug with control wire terminal, EverLink™ lug, compression / busbar lug, aluminum mechanical lug).
All lugs are UL Listed/CSA Certified for their proper application and marked for use with aluminum and copper (Al/Cu) or copper only (Cu) conductors.

I - EverLink™ lug connector

This type of connection uses the EverLink™ system with creep compensation [1] (Schneider Electric patent).
This technique makes it possible to achieve accurate and durable tightening torque, in order to avoid cable creep [1].
When ordered as standard, the upstream connector has control wire terminals (except for 1 pole product) in order to make some measurement or control connections (limited to 10 A maximum). Upstream and dowstream connectors can be interchanged if needed.
When ordered as spare parts, EverLink™ lug connectors always have control wire terminals (except for 1 pole product).

EverLink™ lugs for use with Al or Cu wire for B-Frame circuit breaker

Frame	(Number of wires) wire range		Unit mount	Kit	Qty per kit
	Rigid Solid/stranded	Flexible Fine stranded [4]			
BD, BG, BJ	**Power connection [2], 15-125 A (Cu), 15-100 A (Al)**		◉	◉	1
	(1) 2.5 - 95 mm²	(1) 2.5 - 70 mm²			
	(1) 14 - 3/0 AWG	(1) 6 - 2/0 AWG			
	Control wire terminal [3] up to 10 A (Cu)				
	(1) 1.5 - 6 mm²	(1) 0.5 - 6 mm²			
	(1) 20 - 10 AWG	(1) 20 - 10 AWG			

[1] Creep: normal crushing phenomenon of conductors, that is accentuated over time.
[2] In ≤100 A CU7AL - In >100 A CU7 only. [3] CU7 only. [4] Class K.

II - Compression lug / busbar connection kits

The B-frame circuit breakers may be equipped with captive nuts and screws for direct connection to busbars or to compression (crimp) lugs.
These are readily field-installable, simply by removing the EverLink™ lug and replacing with the appropriate terminal nut assembly.
They are also available factory-installed.

Compression lug / busbar connection kits for B-Frame circuit breakers

Frame	Ampere rating	Tap	Unit mount	Kit	Qty per kit
BD, BG, BJ	15-125 A	M6	◉	◉	2 or 3

Bar and lugs dimensions

Dimension	A	B	C	D	E
mm (in)	6.4 (0.250)	≤ 6.5 (≤ 0.25)	≤ 17 (≤ 0.67)	≤ 7 (0.27)	17 to 20 (0.67 to 0.78)

Specific compression lugs can be ordered for copper and aluminum cable.

Lugs			
Frame	Cable section	Cable type	Qty per kit
BD, BG, BJ	70 mm²	Cu	3 or 4
BD, BG, BJ	6 - 1/0 AWG	Cu	2 or 3
BD, BG, BJ	8 - 1/0 AWG	Al/Cu	2 or 3

Power distribution connectors [*]
These connectors are screwed directly to device terminals equiped with compression lug/busbar connectors. Interphase barriers are supplied with power distribution connectors, but may be replaced by long terminal shields.
Each connector can receive three or six cables.

Power distribution connectors					
Frame	Ampere rating	(Number wires) wire range	Unit mount	Kit	Qty per kit
BD, BG, BJ	15-125 A Al/Cu	(3) 2.5 - 35 mm² (3) 14 - 2 AWG	-	◉	3
BD, BG, BJ	15-125 A Al/Cu	(6) 2.5 - 16 mm² (6) 14 - 6 AWG	-	◉	3

Spreaders
Spreaders can be used to increase the pitch of the cricuit breaker from 27 (1.063) to 35 mm (1.378 in.). They are delivered with interphase barriers and M8 screws, nuts and washers.
Rear insulation screens may have to be used too, depending on the distance between the live uninsulated parts and the grounded metallic back pan.
Customer holes for connection are Ø8 mm (5/16 in.).

Description	Used with	Qty per kit
B-Frame 3 poles spreader	B-Frame compression lug/ busbar connector	1
B-Frame 4 poles spreader	B-Frame compression lug/ busbar connector	1

Note: For a 1 pole, you can use the middle part of a 3 pole spreader, and for a 2 pole, the 2 middle ones of a 4 pole spreader.

III - Mechanical lug kits

The standard EverLink™ lugs can be removed for the installation of mechanical lugs suitable for copper and aluminum conductors (made of tin-plated aluminum).
The mechanical lugs are fastened to the terminals with lug mounting screws inserted from the bottom of the circuit breaker. The lug cover is held in place with built-in snap features. They are sold as field installable kits.

Mechanical lug connection kits for B-Frame circuit breakers					
Frame	Ampere rating	Number of wires and wire range	Unit mount	Kit	Qty per kit
BD, BG, BJ	15-125 A Al/Cu	(1) 2.5 - 70 mm² (1) 14 - 2/0 AWG	-	◉	2 or 3

Torque limiting breakaway bits

Torque limiting breakaway bits may be used, particularly in the field, to tighten at the right torque EverLink™ lug, compression lug or busbar power connections.

Throwaway tips				
Frame	Ampere rating	Torque		Qty per kit
BD, BG, BJ	15-125 A	5 N.m		6 or 8
BD, BG, BJ	15-125 A	9 N.m		6 or 8

[*] Available Q3 2017.

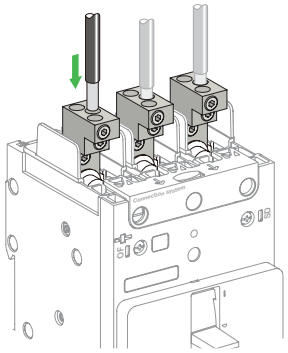
DB423064.eps

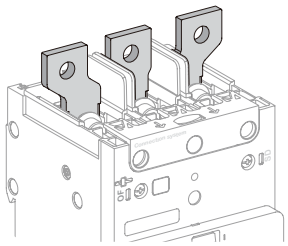
DB421590.eps

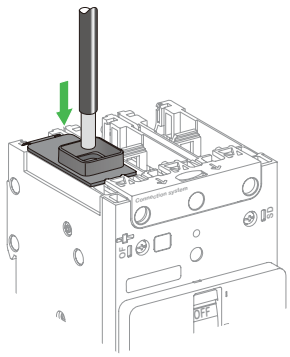
DB419682.eps

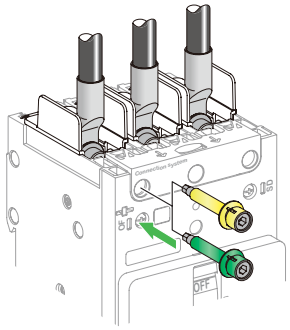
DB419683.eps

Accessories and auxiliaries

Insulation of live parts

A

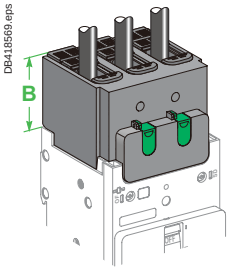

Long terminal shield.

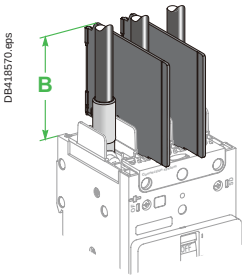

Interphase barriers.

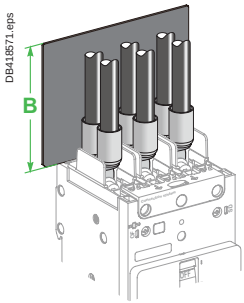

Rear insulation screen.

Insulation of live parts

For 2, 3 or 4 poles products, several accessories are available to ensure insulation and IP:

- long terminal shields IP40
- interphase barriers
- rear insulation screen (especially for spreader with a 35 mm pitch).

Long terminal shields IP40

Products can be equiped with long terminal shields. They can be mounted upstream and downstream and are used for protection against direct contact with power circuits. They provide IP40 degree of protection and IK07 mechanical impact protection. Moreover long terminal shield can be mounted after product installation on plate or DIN rail, and can be removed and put in place even if there are auxiliary wires.
They are used for connection with cables or insulated bars.
They are comprised of two parts assembled with 2 locks and/or captive screws, forming an IP40 cover.

- The top part is transparent in order to be able to see the connection through it and is equipped with sliding grids with break marks for precise adaptation to cables or insulated bars.
- The rear part completely blocks off the connection zone. Partially cut squares can be removed to adapt to all types of connection for cables with lugs or copper bars.

Interphase barriers

Safety accessories for maximum insulation at the power-connection points:

- they clip easily onto the circuit breaker
- not compatible with long terminal shield
- 2 ways mounting: short / long insulation.

Rear insulating screens

Safety accessories providing insulation at the rear of the device.
Their use may be mandatory if no long terminal shield depending of the distance between bare conductors and backplate (see table pages B-8 and B-9).

Insulation accessories 2, 3 and 4 poles products

Description	Used with	Dimension B mm (in.)	Qty per kit
B-Frame long terminal shield	All B-Frame power connections except EverLink™ and when using the spreader kit	50 (1.97)	1
B-Frame interphase barriers	All B-Frame power connections except EverLink™	67/79 (2.64/3.11)	6
B-Frame rear insulation screen (35 mm (1.378 in.) pitch)	All B-Frame products	84 (3.30)	2

Electrical auxiliaries

All PowerPact Multistandard circuit breakers (except 1 pole) have slots for electrical auxiliaries.

Indication contact(s):
- 1 ON/OFF (OF)
- 1 trip indication (SD).

1 voltage release:
- either 1 MN undervoltage release
- or 1 MX shunt trip.

Slot for electrical auxiliaries				
Used with	Number of poles	Quantity OF	Quantity SD	Quantity of voltage release MN or MX
B-Frame	1	-	-	-
	2	1	-	1
	3	1	1	1
	4	1	1	1

OF/SD

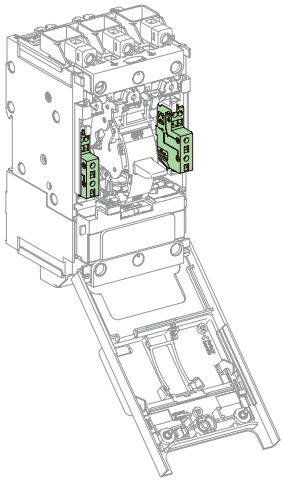

MN/MX

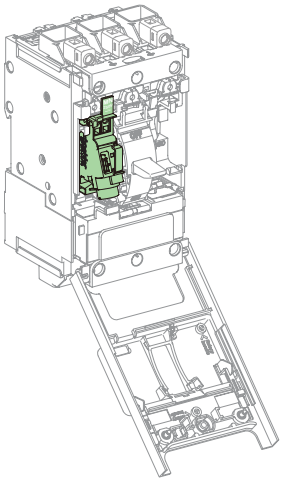

Accessory connections

Electrical accessories are fitted with numbered spring terminal blocks for wires. The maximum wire size is 1.5 mm² (16 AWG) for auxiliary switches (OF or SD), shunt trip MX or undervoltage release MN.

Electrical accessory wire routing can be exited out any of the four corners of the breaker, under the accessory cover even when using long terminal shield.

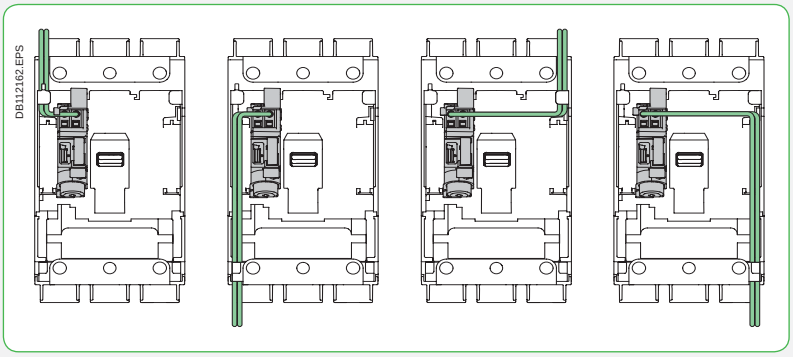

OF

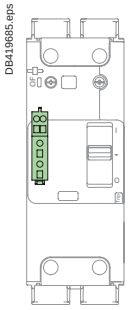

2 Poles

MN/MX

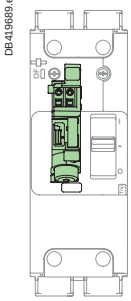

2 Poles

OF SD

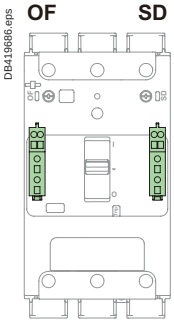

3 Poles

MN/MX

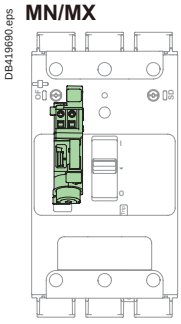

3 Poles

OF SD

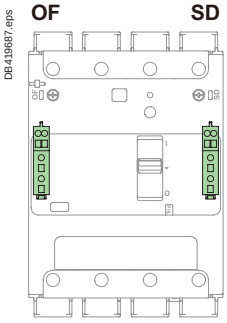

4 Poles

MN/MX

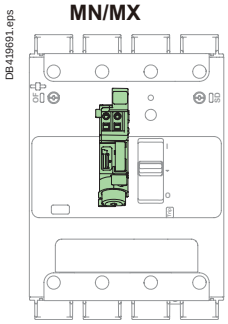

4 Poles

Accessories and auxiliaries
Indication contacts

A

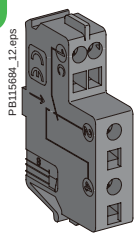

Auxiliary Switch (OF) /
Alarm Switch (SD).

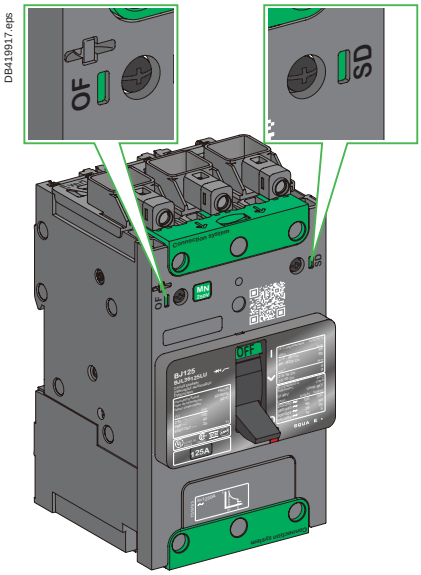

Auxiliary and alarm indication contacts

Indication contacts provide remote information of the circuit breaker status and can thus be used for indications, electrical locking, relays, etc.
They are common point changeover type contacts, with a normaly open (NO) contact and a normaly closed (NC) contact.

Open/Closed - Auxiliary switches (OF)

- Indicates the position of the circuit breaker contacts.

Trip indication - Alarm switch (SD)

- Indicates that the circuit breaker has tripped due to:
  - an electrical fault (overload, short circuit)
  - the operation of a shunt trip
  - undervoltage release
  - the “push-to-trip” button.
- Resets when the circuit breaker is reset.

Installation and connection

- The auxiliary switch (OF) and alarm switch (SD) indication contacts snap into cavities behind the front accessory cover of the circuit breaker and their presence is visible on the front face through green flags.
- One model serves for all indication functions depending on where it is fitted in the circuit breaker.
- Each NO and NC spring terminal may be connected by one 0.5...1.5 mm² (20...16 AWG) stranded copper wire and by two for the common point.

Electrical characteristics of auxiliary contacts

Characteristics						
Rated thermal current (A)		5				
Minimum load		5 mA at 17 V DC				
Utilization cat. (IEC 60947-5-1)		AC12	AC15	DC12	DC13	DC14
Operational current (A)	24 V AC/DC	5	5	5	2.5	1
	48 V AC/DC	5	5	2.5	1.2	0.2
	110...127 V AC / 110 V DC	5	4	0.6	0.35	0.05
	220/240 V AC	5	3	-	-	-
	250 V DC	-	-	0.3	0.05	0.03
	380/440 V AC	5	2.5	-	-	-
	660/690 V AC	5	0.11	-	-	-

UL489, CSA C22.2 No. 5	Ampere rating (A)	Pilot duty standard (A)
48 V AC	5	-
120 V AC	5	3
240 V AC	5	1.5
480 V AC	5	0.75
600 V AC	-	0.6
48 V DC	2.5	-
110 V DC	0.8	-
250 V DC	0.3	-

Standards

- Auxiliary indicator contacts comply with UL 489, CSA C22.2 No. 5 and IEC 60947-5-1 Standards.
- Auxiliary contacts have also been tested according IEC 60 947-5-4 standard.
- Auxiliary contacts are Listed for field installation per UL file E103955 and Certified under CSA file 177007.

Shunt trip (MX) and undervoltage release (MN)

A voltage release can be used to trip the circuit breaker using a control signal. They serve primarily for remote, emergency-off commands. It is advised to test the system every six months.

Shunt trip (MX)

- Trips the circuit breaker when the control voltage rises above 70 % of its rated voltage (Un).
- Impulse type ⩾ 20 ms or maintained control signals.
- Shunt trip 110...130 V AC is suitable for ground-fault protection when combined with a Class I ground-fault sensing element.
- Continuous duty rated coil [1].

Undervoltage release (MN)

- Trips the circuit breaker when the control voltage drops below 35 % of its rated voltage.
- Between 35 % and 70 % of the rated voltage, opening is possible but not guaranted.
- Above 70 % of the rated voltage, opening does not take place.
- Continuous duty rated coil.
- Circuit breaker closing is possible only if the voltage exceeds 85 % of the rated voltage. If an undervoltage condition exists, operation of the closing mechanism of the circuit breaker will not permit the main contacts to touch, even momentarily. This is commonly called “Kiss Free”.

Time-delay unit for an undervoltage release (MN)

- A time delay unit for the MN eliminates the risk of nuisance tripping due to a transient voltage dip lasting less than 200 ms for fixed delay units and up to 3 seconds for adjustable units. For shorter micro-outages, a system of capacitors provides temporary supply to the MN at U > 0.7 Un to ensure non tripping.

The correspondence between MN and time-delay units is shown below.

Power supply	Corresponding MN
Unit with ÿxed delay 200 ms	
48 V AC	48 V DC
220 / 240 V AC	250 V DC
Unit with adjustable delay ⩾ 200 ms	
48 - 60 V AC/DC	48 V DC
100 - 130 V AC/DC	125 V DC
220 - 250 V AC/DC	250 V DC

Installation and connection

- Auxiliary snap into cavity under the front accessory cover of the circuit breaker. The presence and characteristics of the voltage release is visible from the front face through a window.
- Each spring terminal may be connected by one 0.5...1.5 mm² (20....16 AWG) stranded copper wire.

Operation

- The circuit breaker must be reset locally after being tripped by shunt trip (MX) or undervoltage release (MN).
- Tripping by the shunt trip or undervoltage release has priority over manual closing; in the presence of a standing trip order such an action does not result in any closing, even temporarily, of the main contacts.
- Endurance: 50 % of the rated mechanical endurance of the circuit breaker.

Electrical characteristics and wiring recommandations of MN/MX

See page B-3.

Standards

- MN/MX voltage releases comply with with UL 489, CSA C22.2 No. 5 and IEC 60947-2 Standards.
- MN/MX voltage releases are Listed for field installation per UL file E103955 and Certified under CSA file 177007.

[1] Except for MX 24 V AC/DC (in case of continuous activation, may generate some minor perturbation in sensitive environment).

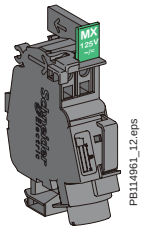

MX or MN voltage release.

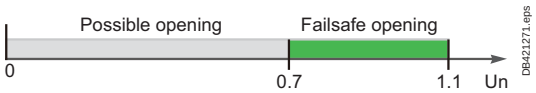

Opening conditions of the MX release.

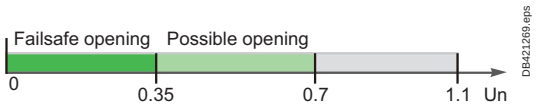

Opening conditions of the MN release.

Closing conditions of the MN release.

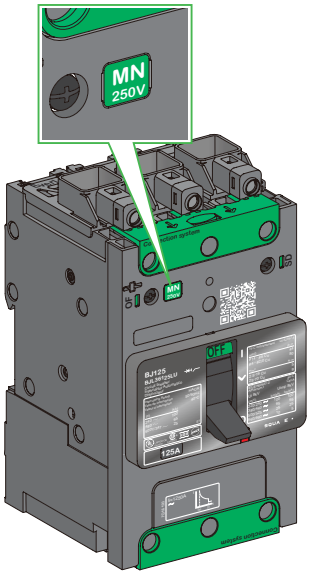

Operating voltages for MN/MX.

Accessories and auxiliaries
Rotary handles

A

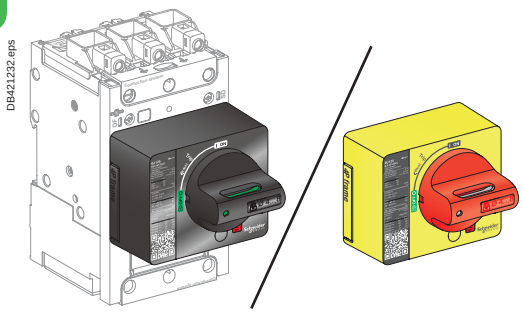

Directly mounted rotary handle.

Direct rotary handles

Installation
The direct mounted rotary handle has to be mounted by 3 screws on the front accessory cover.

Operation
The direct rotary handle maintains:
- suitability for isolation
- indication of the three positions OFF (**O**), ON (**I**) and tripped (**Trip**)
- access to the “push-to-trip” button
- visibility of, and access to the trip unit.

Device padlocking
The circuit breaker may be locked in the OFF position by using one to three padlocks (not supplied) or in ON position after customer modification of the rotary handle before installation, padlock shackle Ø4-8 mm (3/16-5/16 in.). Locking in the ON position does not prevent the circuit breaker from tripping if a fault occurs. In this case, the handle remains in the ON position after the circuit breaker trips. Unlocking is required for the handle to go to the tripped then the OFF position.

Variations: door locking
Door locking built-in functionality can be activated by the customer to prevent opening the door when the circuit breaker is ON or in trip position. For exceptional situations, door locking can be temporarily disabled with a tool by qualified personel to open the door when the circuit breaker is closed.

Models
- Standard with black handle.
- VDE type with red handle and yellow bezel for machine tool control.

Standards
The directly-mounted rotary operating handle is UL Listed under file E103955 and CSA Certified under file 177007. Degree of protection IP40, IK07.

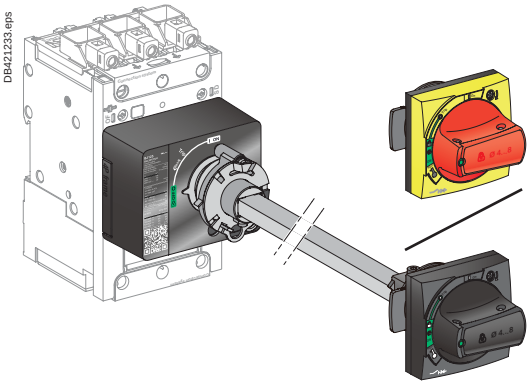

Door-mounted rotary handle.

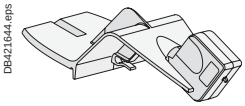

Laser square tool.

Extended rotary handles

Installation
The door-mounted (extended) rotary handle is made up of:
- a unit that has to be screwed on the front accessory cover of the circuit breaker
- an assembly (handle mechanism and front plate) on the door that is always secured in the same position, whether the circuit breaker is installed vertically or horizontally
- an adjustable extension shaft.

The handle mechanism is fixed with a nut (Ø22 mm) to make assembly easier. The Laser Square tool (GVAPL01) can be used to accurately align the hole on the door with the circuit breaker.

Operation when door is closed
The door mounted handle makes it possible to operate a circuit breaker installed in an enclosure from the front. The door mounted operating handle maintains:
- suitability for isolation
- indication of the three positions OFF (**O**), ON (**I**) and tripped (**Trip**)
- visibility of and access to trip unit when the door is open
- degree of protection of the handle on the door: IP54 or IP65 as per IEC 529.

Mechanical door locking when device closed
A standard feature of the extended rotary handle is a locking function, built into the shaft, that disables door opening when the circuit breaker is in the ON or tripped positions.
Door locking can be temporarily disabled with a tool by qualified personnel to open the door without opening the circuit breaker. This operation is not possible if the handle is locked by a padlock.

Device and door padlocking
Padlocking locks the circuit breaker handle and disables door opening:
- standard situation, in the OFF position, using 1 to 3 padlocks, shackle Ø4-8 mm (3/16 - 5/16 in.), padlocks are not supplied
- for the black handle, with a voluntary modification of the door handle (to be done by the customer during installation), in the ON and OFF positions. Locking in the ON position does not prevent the circuit breaker from tripping if a fault occurs. In this case, the handle remains in the ON position after the circuit breaker trips. Unlocking is required for the handle to go to the tripped then the OFF position.

Operation when door is opened
An open door shaft operator can be used to operate the circuit breaker when the door is opened. This accessory complies with UL508.
The indication of the three positions OFF (**O**), ON (**I**) and tripped (**Trip**) is visible on the circuit breaker.
The circuit breaker itself may be locked in OFF position when the door is opened by 1 padlock / lockout hasp, shackle Ø4-8 mm (3/16 - 5/16 in.).

Shaft length
The shaft length is the distance between the back of the circuit breaker and the door:
- minimum shaft length is 200 mm (7.87 in.)
- maximum shaft length is 600 mm (24 in.)
- shaft length must be adjusted.

Models
- Standard with black handle (IP54).
- VDE type with red handle and yellow bezel for machine tool control (IP54).
- IP65 with red handle and yellow bezel.

IP54 models can be used in NEMA 12 enclosure applications, and IP65 in NEMA 12, 3R and/or 4X ones.

Standards
The door-mounted rotary operating handle is UL Listed under file E103955 and CSA Certified under file 177007.

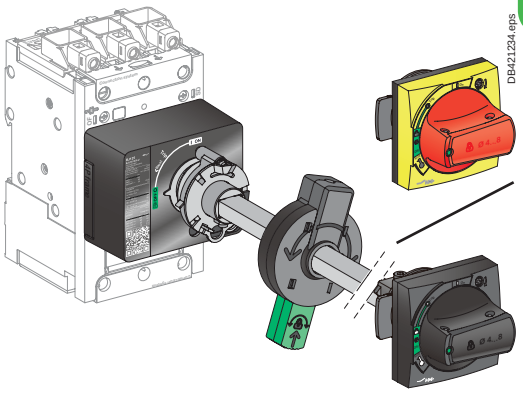

Door-mounted rotary handle with open door shaft operator.

Side rotary handles (left or right)

Installation
The side-mounted rotary handle is made up of:
- a unit that has to be screwed on the front accessory cover of the circuit breaker
- an assembly (handle and front plate) on the side (left or right) of the enclosure
- an adjustable extension shaft.

The handle mechanism is fixed with a nut (Ø22 mm) to make assembly easier.

Operation
The side mounted rotary handle makes it possible to operate a circuit breaker installed in an enclosure from the side. The side mounted rotary handle maintains:
- suitability for isolation
- indication of the three positions OFF (**O**), ON (**I**) and tripped (**Trip**). Moreover, the position is visible on the circuit breaker itself.
- visibility of and access to the trip unit when the door is open
- degree of protection of the handle on the side: IP54 or IP65 as per IEC 529.

Device padlocking
The circuit breaker may be locked in the OFF position, or, for the black rotary handle only, in the ON position after voluntary modification of the side handle (to be done by the customer during installation), by using one to three padlocks, padlock shackle Ø4-8 mm (3/16-5/16 in.); padlocks are not supplied.
Locking in the ON position does not prevent the circuit breaker from tripping if a fault occurs. In this case, the handle remains in the ON position after the circuit breaker trips. Unlocking is required for the handle to go to the tripped then the OFF position.

Shaft length
The shaft length is the distance between the side of the circuit breaker and the side of the enclosure:
- minimum shaft length is 45 mm (1.77 in.)
- maximum shaft length is 480 mm (18.90 in.)
- shaft length must be adjusted.

Models
- Standard with black handle (IP54).
- VDE type with red handle and yellow bezel for machine tool control (IP54).
- IP65 with red handle and yellow bezel (by ordering a standard one and an IP65 universal handle).

IP54 models can be used in NEMA 12 enclosure applications, and IP65 in NEMA 12, 3R and/or 4X ones.

Standards
The side-mounted rotary operating handle is UL Listed under file E103955 and CSA Certified under file 177007.

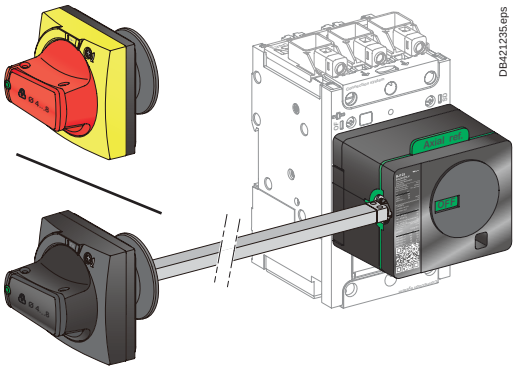

Side mounted rotary handle.

Accessories and auxiliaries

Locks and sealing accessories

A

Handle padlocking device [1]		
Fixed (OFF only)	Fixed (OFF or ON)	Removable (OFF only)

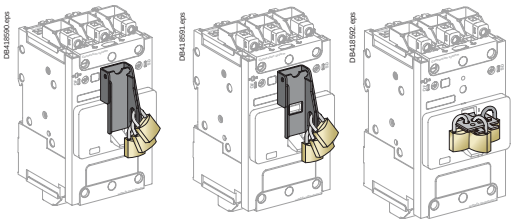

[1] Rotary handle has integral padlocking capability.

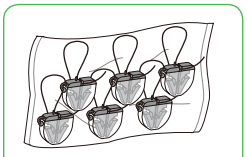

Sealing accessories.

Locks

Padlocking systems can accept up to three padlocks with diameters of 5-8 mm (3/16-5/16 in.); padlocks not supplied. Locking in the OFF position provides isolation as per IEC 60947-2.

Control device	Function	Means	Required accessories
Toggle	Lock in OFF position	Padlock	Removable device
	Lock in OFF or ON position	Padlock	Fixed device
	Lock in OFF position	Padlock	
Direct rotary handle	Lock in ■ OFF position ■ OFF or ON position [1]	Padlock	-
Extended/side rotary handle	Lock in ■ OFF position ■ OFF or ON position [2] with door opening prevented for extended	Padlock	-
	For extended, door opened, lock in OFF position	Padlock	

[1] Following a simple modification of the mechanism.
[2] Following a simple modification of the mechanism - black handle only.

Sealing accessories

Sealing accessories are available. Each bag of accessories contains all the parts required for the types of sealing indicated below.
A bag contains:
- 6 sealing accessories
- 6 plastic seals.

Types of seals and corresponding functions

Protected operations		
Control type	■ Front removal ■ Access to auxiliaries.	■ Access to power connections
Toggle	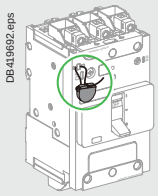	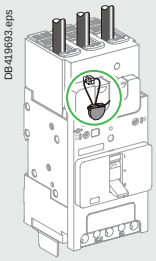
Rotary handle	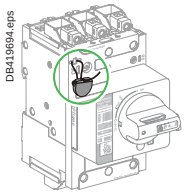	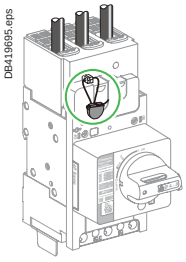

Installation recommendations

Operating and installation conditions B-2
Voltage release wiring rules B-3

Installation in equipment
Safety clearances and minimum distances B-7
B-Frame safety clearance, UL standard B-8
B-Frame safety clearance, IEC standard B-9

B

Other chapters
Functions and characteristics A-1
Dimensions C-1
Wiring diagrams D-1
Additional characteristics E-1
Catalogue numbers F-1
Glossary G-1

Operating and installation conditions

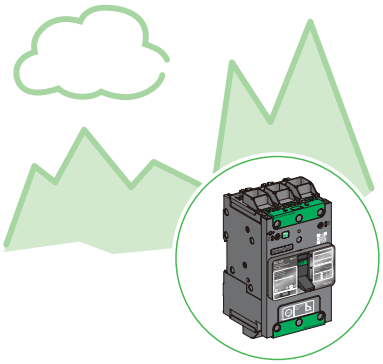

DB419696.eps

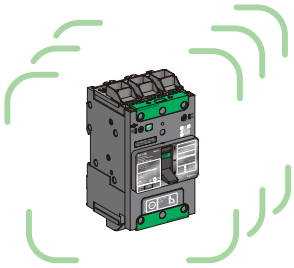

DB419697.eps

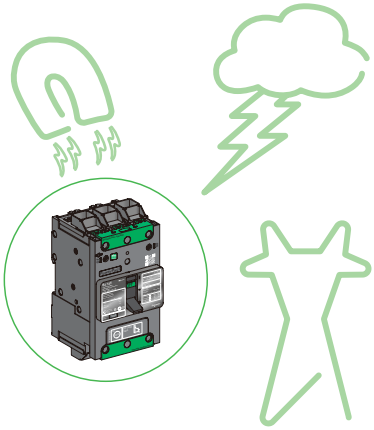

DB419698.eps

Ambient temperature

PowerPact Multistandard circuit breakers may be used between -25 °C and +70 °C (-13°F and 158°F).
For temperatures higher than 40 °C (104°F) inside the enclosure, devices must be derated.
Circuit breakers should be put into service under normal ambient, operating-temperature conditions.
Exceptionally, the circuit breaker may be put into service when the ambient temperature is between -35 °C and -25 °C (-31°F and -13°F).
The permissible storage-temperature range for PowerPact Multistandard circuit breakers in the original packing is -50 °C and +85 °C (-67°F and 185°F).

Altitude derating

Altitude does not significantly affect the characteristics of PowerPact Multistandard circuit breakers up to 2000 m (6560 ft). Above this altitude, it is necessary to take into account the decrease in the dielectric strength and cooling capacity of air.
The following table gives the corrections to be applied for altitudes above 2000 m (6560 ft).
The breaking capacities remain unchanged.

Altitude (m)		2000 (6560 ft)	3000 (9840 ft)	4000 (13120 ft)	5000 (16400 ft)
Impulse withstand voltage (kV)		8	7.1	6.4	5.6
Insulation voltage (V)	Ui	800	710	635	560
Maximum operational voltage (V)	Ue	690	690	635	560
Average current capacity (A) at 40 °C (104 °F)	In x	1.0	0.98	0.96	0.94

Vibrations

PowerPact B Multistandard devices resist mechanical vibrations.
They meet following levels of IEC 60068-2-6:
- 2.0 to 25 Hz and amplitude ±1.6 mm
- 25 to 100 Hz acceleration ±4 g.

Excessive vibration may cause tripping, breaks in connections or damage to mechanical parts.

Climatic withstand

The materials used in PowerPact B circuit breakers will not support the growth of fungus and mold.
PowerPact B circuit breakers have passed the test defined below for extreme atmospheric conditions.
Dry cold and dry heat:
- IEC 60068-2-1-dry cold at -55 °C
- IEC 60068-2-2-dry heat at +85 °C.

Damp heat (tropicalization)
- IEC 60068-2-30–damp heat (temperature + 55 °C and relative humidity of 95 %).
- IEC 60068-2-52 severity 2 - Cycling salt mist.

Electromagnetic disturbances

PowerPact B Multistandard devices have successfully passed the electromagnetic-compatibility tests (EMC) defined by the following international standards:
IEC/EN 60947-2: Low-voltage switchgear and controlgear, part 2: circuit breakers.

Operating and installation conditions

Voltage release wiring rules

Shunt trip (MX) and undervoltage release (MN)

Recommended maximum cable lengths

In certain circumstances, high cable capacitance due to an excessive cable length could prevent an undervoltage release MN from dropping out resulting in safety issues. In case of a shunt trip MX, an untimely trip may occur due to capacitive current leak.
To avoid these dysfunction due to cable capacitance C, the maximum cable length (L) is defined by the following table for a 1.5 mm² cable (16AWG).

Power supply voltage (Un)	Maximum cable length undervoltage trip (MN) [1]	Shunt trip (MX) [1]
24 V AC	1 243 m (4,078 ft)	3 653 m (11,985 ft)
24 V DC	unlimited	> 3653 m (11,985 ft)
48 V AC	583 m (1912 ft)	1 667 m (5,469 ft)
48 V DC	unlimited	> 1667 m (5,469 ft)
110...130 V AC	126 m (413 ft)	913 m (2,995 ft)
110...130 V DC	unlimited	> 913 m (2,995 ft)
208-240 V AC	109 m (358 ft)	160 m (525 ft)
250 V DC	unlimited	> 160 m (525 ft)
277 V AC	98 m (322 ft)	120 m (394 ft)
380-415 V AC	86 m (282 ft)	80 m (262 ft)
440-480 V AC	56 m (184 ft)	67 m (220 ft)

[1] Make sure auxiliaries supply voltage is within working range (0.85 Un mini...1.1 Un maxi).

If a longer cable length is required, several solutions are possible to counteract excessive cable capacitance:
- use DC operated auxiliaries
- use lower control voltage (make sure auxiliaries supply voltage is within working range: 0.85 Un minimum...1.1 Un maximum)
- if high voltage and long control cables are required for an AC undervoltage release (MN), add a rectifier bridge (ref LV426899 – DIN rail compatible) in the control circuit. It will prevent drop out problems but increase operating time.

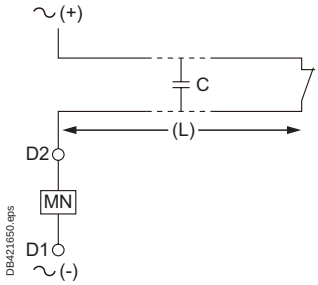

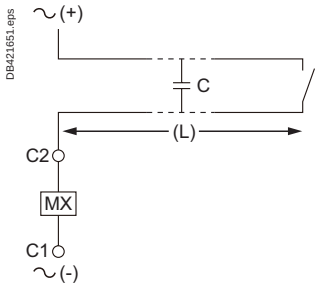

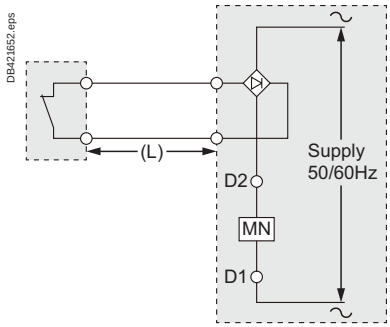

Electrical characteristics of MN/MX

Characteristics			AC	DC
Rated voltage (V)			24, 48, 110...130, 208...240, 277, 380...415, 440... 480	24, 48, 125, 250
Power requirements	MX	Pickup (< 50 ms)	< 6 VA	< 10 W
		Seal-in	< 4 VA	< 1 W
	MN		< 7 VA	< 2 W
Clearing time (ms)			< 50	< 50
Operating range			up to 1.1 Un	

Operating and installation conditions

Derating and correction factor depending of temperature

The overload protection is calibrated at 40 °C in the lab. This means that when the ambient temperature is less or greater than 40 °C, the In protection pick-up is slightly modified.

Choosing the right rating depending of the temperature

Over the reference temperature of 40°, the circuit breaker has to be derated following the table below:

Correction factor table for thermal magnetic (TM-D) PowerPact B circuit breakers

Rating (A) In	Temperature (°C / °F)						
	40 / 104	45 / 113	50 / 122	55 / 131	60 / 140	65 / 149	70 / 158
15	15	14	14	13	12	12	11
20	20	19	19	18	18	17	16
25	25	24	24	23	22	21	20
30	30	29	28	27	26	25	24
35	35	34	33	32	31	31	30
40	40	39	38	37	36	35	33
45	45	44	42	41	39	37	36
50	50	49	47	45	44	42	40
60	60	58	56	55	53	51	48
70	70	67	64	61	59	55	53
80	80	77	73	70	67	63	59
90	90	87	83	80	76	72	68
100	100	99	96	92	85	80	69
110	110	107	103	99	94	89	76
125	125	121	117	112	109	104	100

Operating and installation conditions

Calculating the tripping time for a given temperature:

After having determine the corrected ratio I/In, the tripping time at 40°C (104°F) is defined with the tripping curves (see page E-2 and page E-6).
Then to obtain the tripping time at a different temperature, the ratio I/In has to be corrected with the correction factor below:

Correction factor table for thermal magnetic (TM-D) PowerPact B circuit breakers

Rating (A) In	Temperature (°C / °F)												
	10 / 50	15 / 59	20 / 68	25 / 77	30 / 86	35 / 95	40 / 104	45 / 113	50 / 122	55 / 131	60 / 140	65 / 149	70 / 158
15	1.21	1.18	1.15	1.11	1.08	1.04	1	0.96	0.92	0.87	0.83	0.78	0.72
20	1.16	1.13	1.11	1.08	1.06	1.03	1	0.97	0.94	0.91	0.88	0.85	0.81
25	1.15	1.13	1.11	1.08	1.05	1.03	1	0.97	0.94	0.91	0.88	0.85	0.82
30	1.16	1.14	1.11	1.08	1.06	1.03	1	0.97	0.94	0.91	0.87	0.84	0.80
35	1.13	1.11	1.09	1.07	1.05	1.02	1	0.98	0.95	0.93	0.90	0.87	0.85
40	1.14	1.12	1.10	1.07	1.05	1.03	1	0.97	0.95	0.92	0.89	0.86	0.83
45	1.17	1.15	1.12	1.09	1.06	1.03	1	0.97	0.94	0.90	0.87	0.83	0.79
50	1.16	1.14	1.11	1.08	1.06	1.03	1	0.97	0.94	0.91	0.87	0.84	0.80
60	1.16	1.14	1.11	1.08	1.06	1.03	1	0.97	0.94	0.91	0.88	0.84	0.81
70	1.18	1.15	1.13	1.10	1.06	1.03	1	0.96	0.91	0.88	0.84	0.79	0.75
80	1.19	1.15	1.12	1.09	1.06	1.03	1	0.96	0.92	0.88	0.83	0.79	0.74
90	1.19	1.15	1.12	1.10	1.06	1.04	1	0.96	0.92	0.89	0.84	0.80	0.75
100	1.21	1.18	1.15	1.12	1.09	1.05	1	0.99	0.96	0.92	0.85	0.80	0.69
110	1.19	1.16	1.13	1.10	1.07	1.04	1	0.98	0.94	0.90	0.85	0.80	0.70
125	1.17	1.14	1.12	1.09	1.06	1.03	1	0.96	0.94	0.90	0.87	0.83	0.80

Example: What is the tripping time of a PowerPact B 100 A for an overload of 500 A?

- At 40 °C, I/In = 5/1 = 5, tripping time is between 7 and 35 seconds.
- At 20 °C, I/In = 5/1.15 = 4.35, tripping time is between 9 and 50 seconds.
- At 60 °C, I/In = 5/0.85 = 5.88, tripping time is between 5 and 25 seconds.

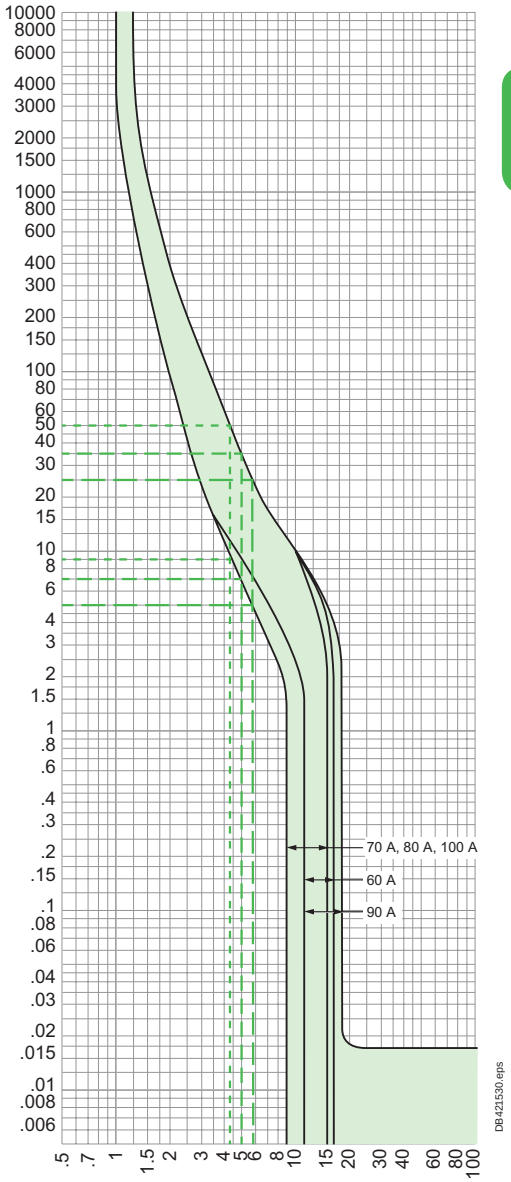

Operating and installation conditions

DB419658.eps

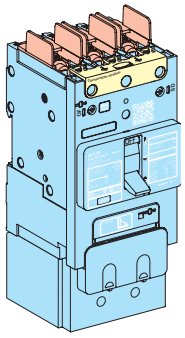

DB421245.eps

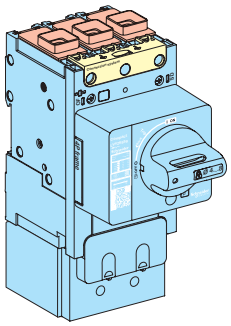

DB421246.eps

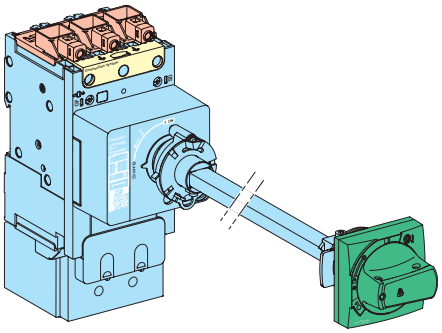

DB419699.eps

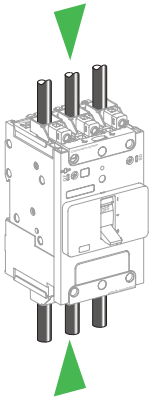

Protection degree

Protection degree of the product, according to IEC60259, depends of its configuration:

Colours	Definition
	IP 54/65: side / front extended rotary handle
	IP 40: front cover, side, back, long terminal shield, direct rotary handle
	IP20: power connection cover
	may be IP20 or less depending of the kind of power connections and cable size used

Reverse feeding

PowerPact B Multistandard circuit breakers can be supplied from either the top or the bottom without any reduction in performance giving the designer/installer flexibility in choosing the mounting location for the breaker and feed cables.
All connection and insulation accessories can be used on circuit breakers supplied either from the top or bottom.

Weight

The table below presents the weights of the circuit breakers.

Type of device		Circuit breakers
B-frame	1P	510 g / 1.1 lbs
	2P	770 g / 1.7 lbs
	3P	1070 g / 2.4 lbs
	4P	1440 g / 3.2 lbs

Installation in equipment

Safety clearances and minimum distances

General rules

When installing a circuit breaker, minimum distances (safety clearances) must be maintained between the device and panels, busbars and other protection devices installed nearby. These distances are defined by tests carried out in accordance with UL standards.

If installation is not checked by type tests, it is also necessary to:

- use insulated bars for circuit-breaker connections
- segregate the busbars using phase barriers.

For PowerPact Multistandard devices, terminal shields and interphase barriers are recommended and may be mandatory depending on type of installation (unit-mount, drawout, etc.).

Power connections

The table below indicates the connection requirements for PowerPact B Multistandard devices to ensure insulation of live parts for the various types of connection.

Connection accessories such as spreaders and some crimp lugs are supplied with interphase barriers. Long terminal shields provide a degree of protection of IP40.

PowerPact-B Multistandard: rules to be respected to ensure insulation of live parts

	EverLink connector with or without control wire terminal			Mechanical lug connector			Compression lug / busbar connector		
	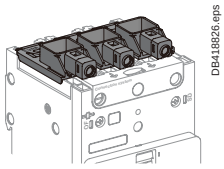 DB418826.eps			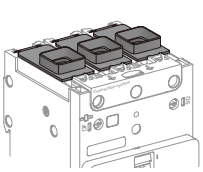 DB418827.eps			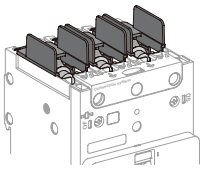 DB418828.eps		
Insulation accessory options per conductor type									
Type of conductor	**No insulating accessory**	**Interphase barriers**	**Long terminal shield**	**No insulating accessory**	**Interphase barriers**	**Long terminal shield**	**No insulating accessory**	**Interphase barriers**	**Long terminal shield**
Cables DB419248.eps	Possible	-	-	Possible	Possible	Possible	-	-	-
Insulated bars DB419249.eps	-	-	-	-	-	-	Possible	Possible	Possible
Cables + crimp lugs DB419250.eps	-	-	-	-	-	-	Forbidden	Mandatory	Possible [1]
Cables + crimp lugs with heat-shrinkable sheath DB419251.eps	-	-	-	-	-	-	Possible	Possible	Possible
Extension terminals: spreader DB419252.eps	-	-	-	-	-	-	Forbidden	Mandatory	-
Extension terminals: cables + power distribution connector DB419253.eps	-	-	-	-	-	-	Forbidden	Mandatory	Possible [1]

[1] Instead of phase barriers.

Note: For uninsulated bar connections, please consult us.

Installation in equipment

B-Frame safety clearance, UL standard

B

Minimum clearance between backplate and uninsulated power connections
For all types of PowerPact B-frame circuit breakers that use uninsulated power connections (for example, busbars, spreaders, or uninsulated crimped lugs), the minimum clearance distance with the enclosure backplate is shown below.

When using uninsulated connectors be sure to maintain the proper clearance between live parts and grounded metallic back pan or use the insulation screen.

UL standard

Minimum enclosure dimensions

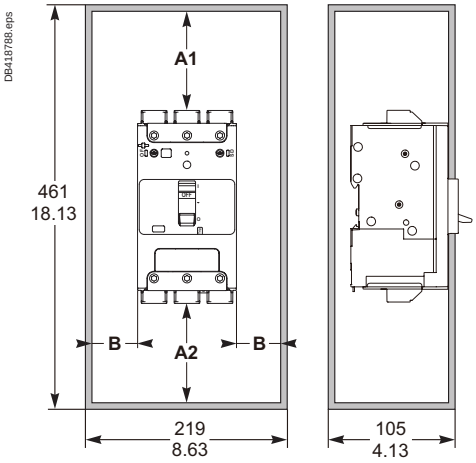

Operating voltage U ⩽ 690 V							
For devices equipped with:	Clearance (mm)						
	Between devices	Between device and sheet metal					
		Painted sheet metal			Bare sheet metal		
		A1	A2	B	A1	A2	B
■ no accessories	0 0	30 mm 1.18 in.	5 mm 0.19 in.	0 0	40 mm 1.57 in.	5 mm 0.19 in.	5 mm 0.19 in.
■ interphase barriers	0 0	0 0	0 0	0 0	0 0	0 0	5 mm 0.19 in.
■ long terminal shields	0 0	0 0	0 0	0 0	0 0	0 0	5 mm 0.19 in.

Minimum safety clearances to bare busbars

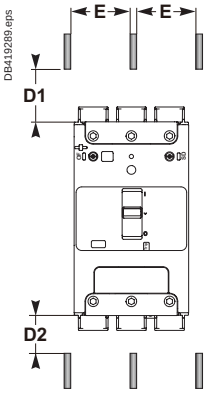

Operating voltage U ⩽ 690 V			
Clearances to live bare busbars [1]			
Spacing E ⩽ 60 mm (2.36 in.)		Spacing E > 60 mm (2.36 in.)	
D1	D2	D1	D2
200 mm 7.87 in.	100 mm 3.94 in.	120 mm 4.72 in.	60 mm 2.36 in.

[1] These clearances can be reduced for special installations as long as the configuration is checked by tests.

Compression lug safety clearance

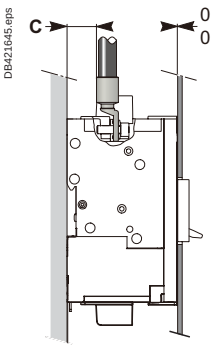

An insulating screen or long terminal shield is required if:
- for 2, 3, 4 poles C < 9.5 mm (< 0.37 in.),
- for 1 pole C < 12.7 mm (<0.5 in.).

Installation in equipment

B-Frame safety clearance, IEC standard

IEC standard

Minimum safety clearances

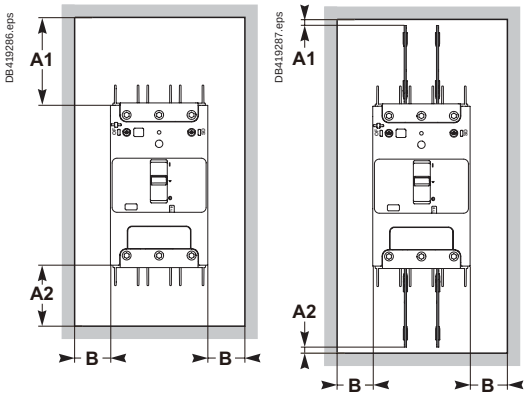

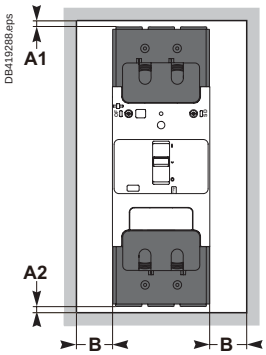

Operating voltage U ⩽ 690 V							
For devices equipped with:	Clearance (mm)						
	Between devices	Between device and sheet metal					
		Painted sheet metal			Bare sheet metal		
		A1	A2	B	A1	A2	B
■ no accessories	0 0	30 mm 1.18 in.	5 mm 0.19 in.	0 0	40 mm 1.57 in.	5 mm 0.19 in.	5 mm 0.19 in.
■ interphase barriers	0 0	0 0	0 0	0 0	0 0	0 0	5 mm 0.19 in.
■ long terminal shields	0 0	0 0	0 0	0 0	0 0	0 0	5 mm 0.19 in.

Minimum safety clearances to bare busbars

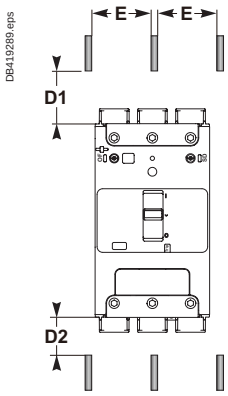

Operating voltage U ⩽ 690 V			
Clearances to live bare busbars [1]			
Spacing E ⩽ 60 mm (2.36 in.)		Spacing E > 60 mm (2.36 in.)	
D1	D2	D1	D2
200 mm 7.87 in.	100 mm 3.94 in.	120 mm 4.72 in.	60 mm 2.36 in.

[1] These clearances can be reduced for special installations as long as the configuration is checked by tests.

Compression lug safety clearance

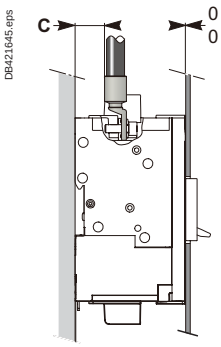

An insulating screen or long terminal shield is required if:
- for 2, 3, 4 poles C < 9.5 mm (< 0.37 in.),
- for 1 pole C < 12.7 mm (<0.5 in.).

B

Dimensions

PowerPact B-Frame Circuit Breakers

Circuit breaker dimensions C-2
Connectors dimensions C-3
Terminal shield dimensions C-4
Interphase barrier dimensions C-5
Insulation screen C-6
Mounting on backplate C-7
Mounting on DIN rail C-8
Direct rotary handle C-9
Extended rotary handle dimensions C-10
Front -panel cutout C-10
Lateral rotary handle dimensions C-11
Connection with accessories C-12

C

Other chapters

Functions and characteristics A-1
Installation recommendations B-1
Wiring diagrams D-1
Additional characteristics E-1
Catalogue numbers F-1
Glossary G-1

PowerPact B-Frame Circuit Breakers

Circuit breaker dimensions

mm / in.

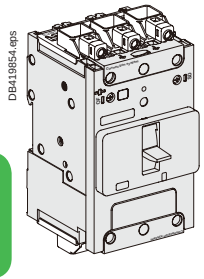

1P

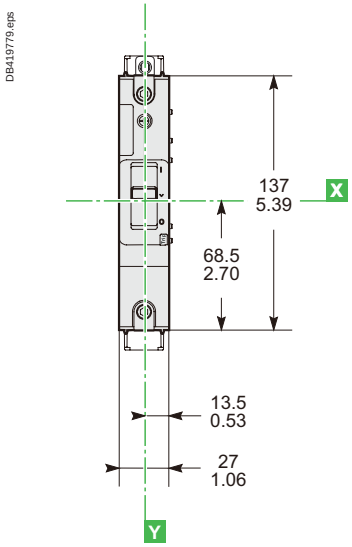

2P

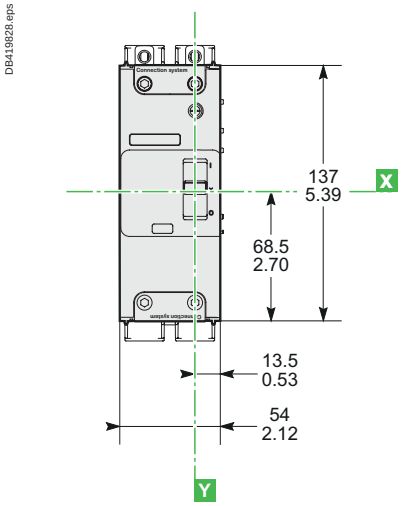

3P

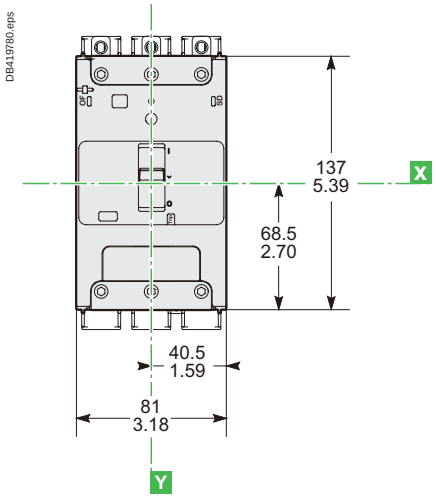

4P

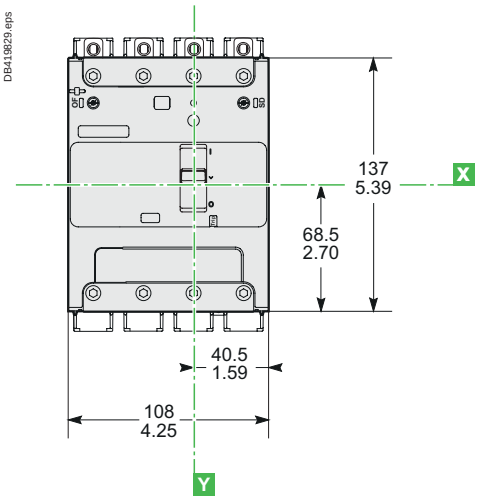

Side view

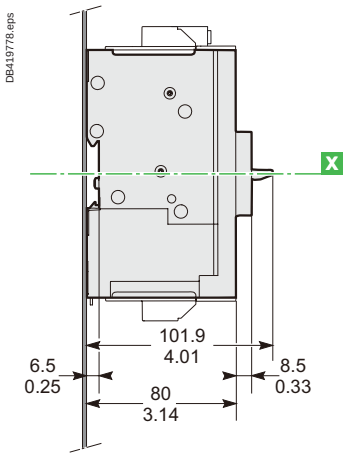

Connectors dimensions

mm / in.

EverLink with control wire terminal connector

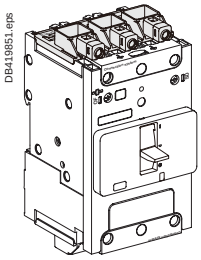

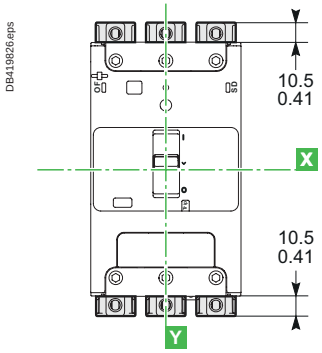

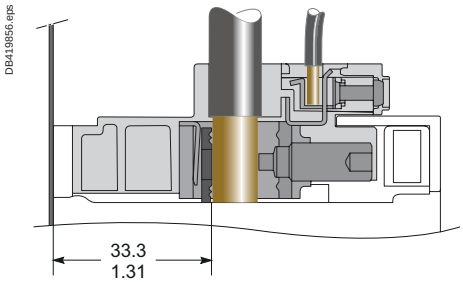

Everlink without control wire terminal connector

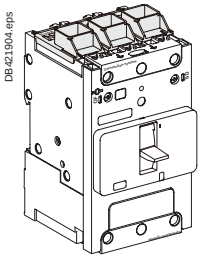

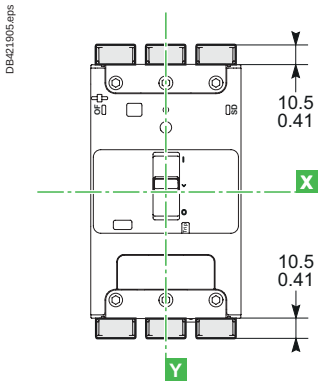

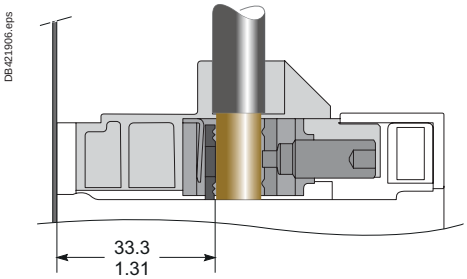

Mechanical lug connector

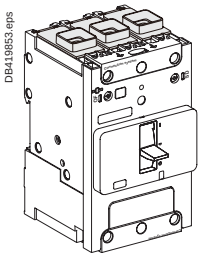

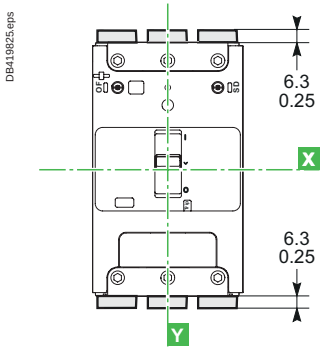

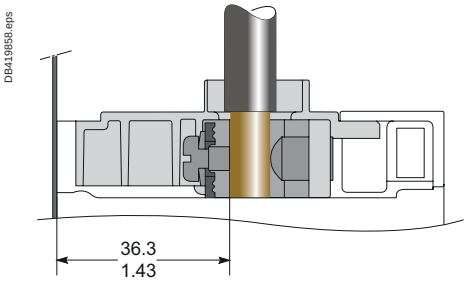

Compression lug / busbar connector

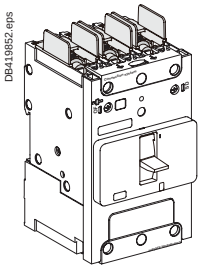

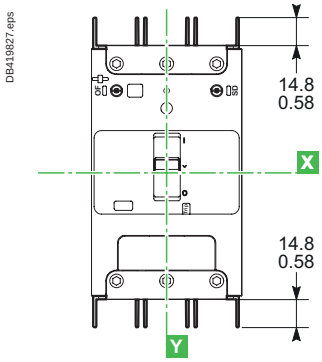

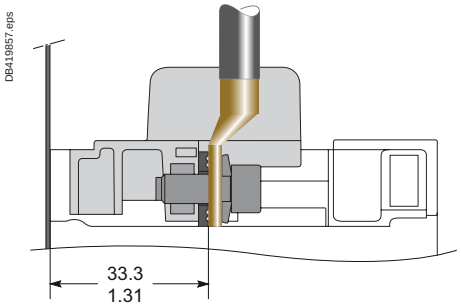

C

PowerPact B-Frame Circuit Breakers

C

Terminal shield dimensions

mm
in.

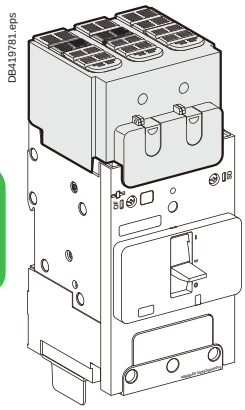

2P

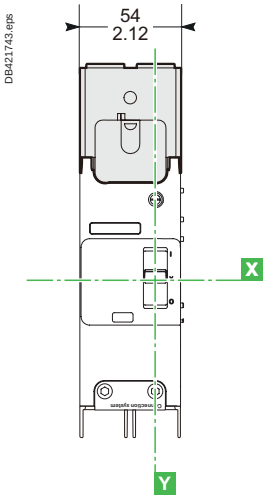

3P

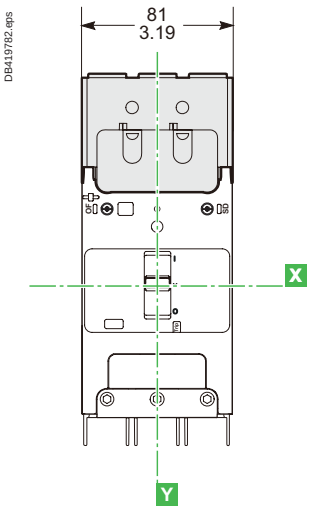

4P

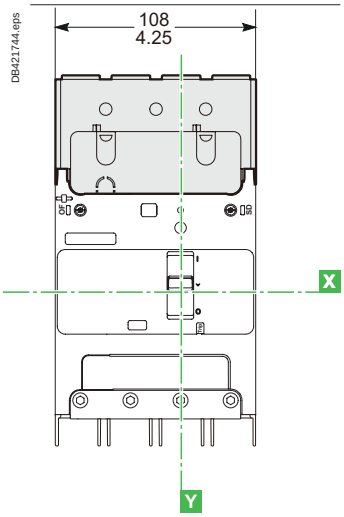

Side view

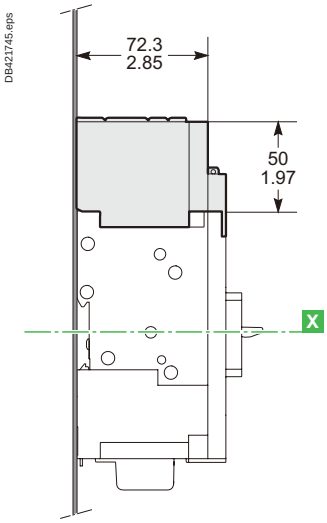

Interphase barrier dimensions

mm
in.

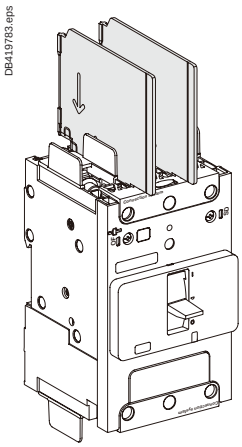

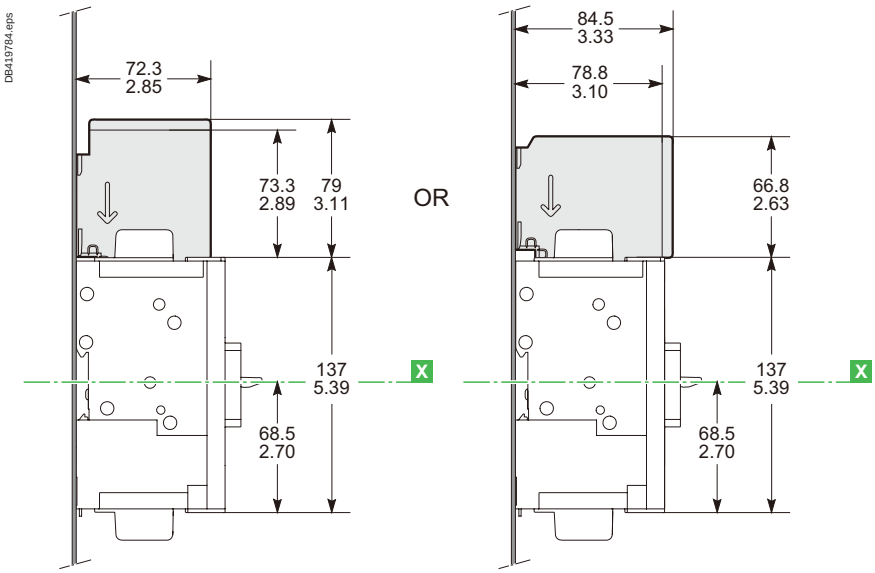

PowerPact B-Frame Circuit Breakers

C

Insulation screen

mm / in.

DB419785.eps

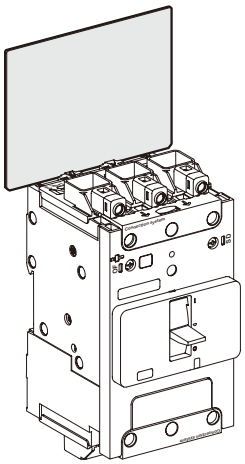

2P

DB421604.eps

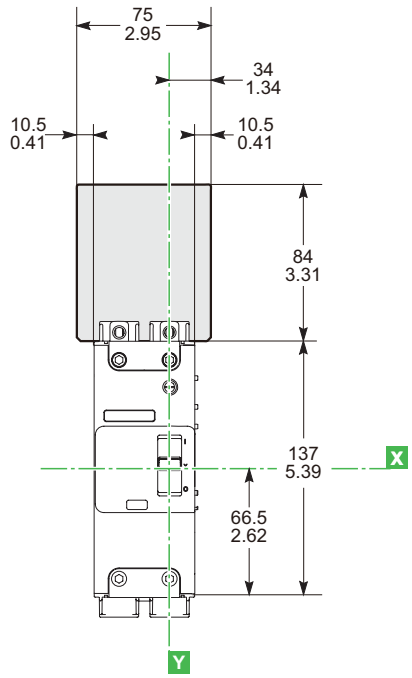

3P

DB419786.eps

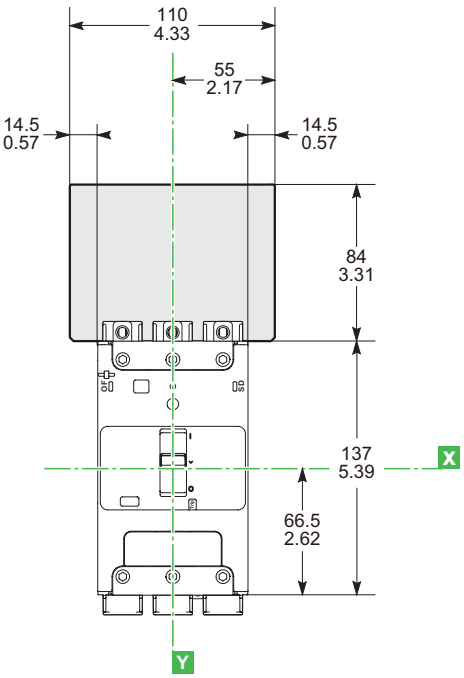

4P

DB421605.eps

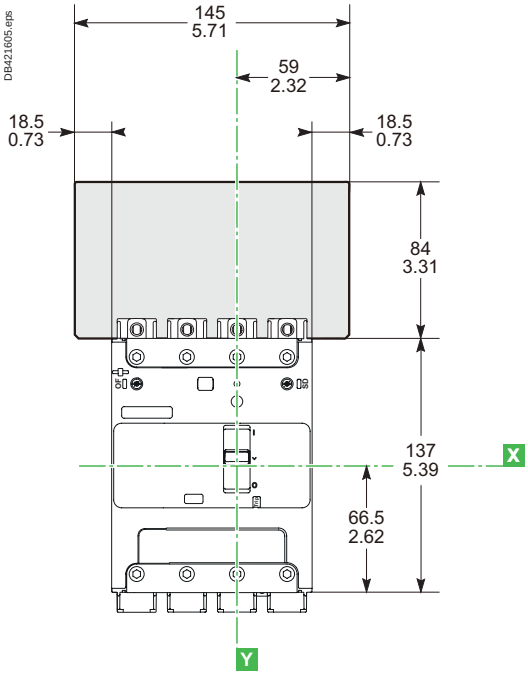

Life Is On Schneider Electric

PowerPact B-Frame Circuit Breakers

Mounting on backplate

mm / in.

1P

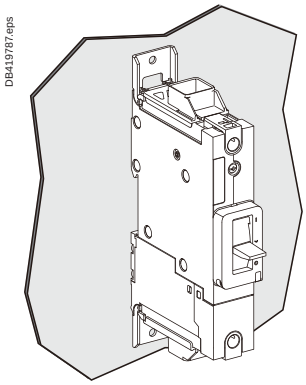

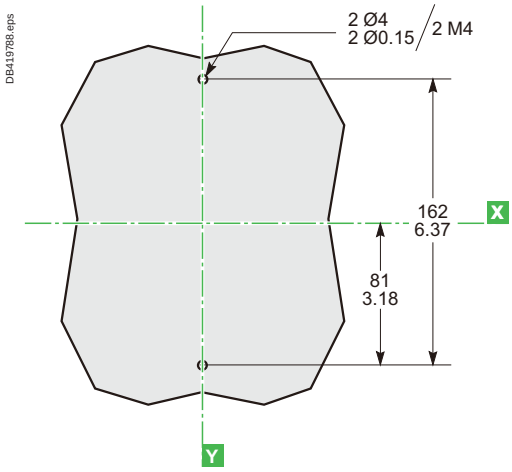

2P

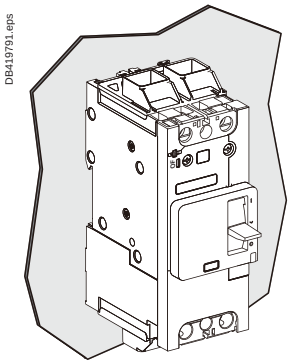

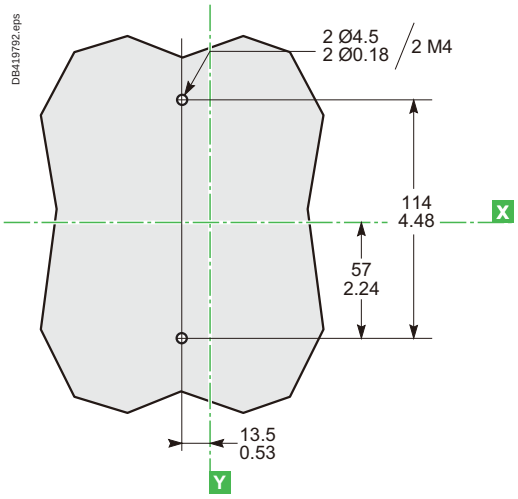

3P/4P

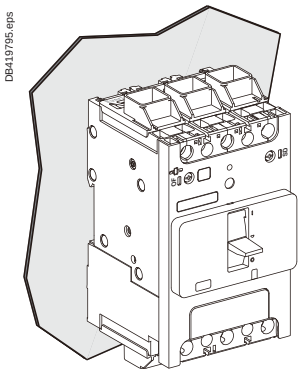

3P

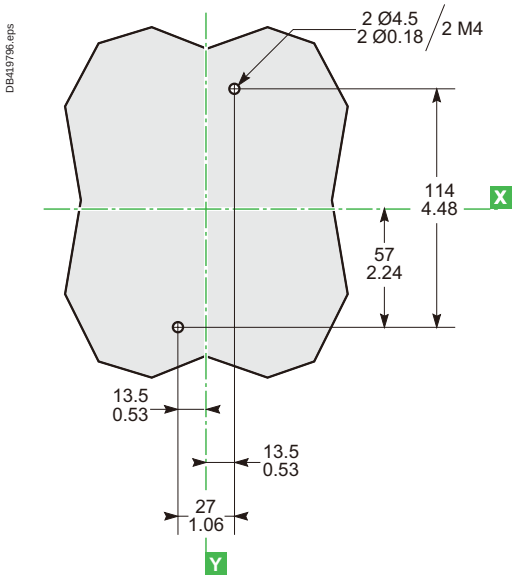

4P

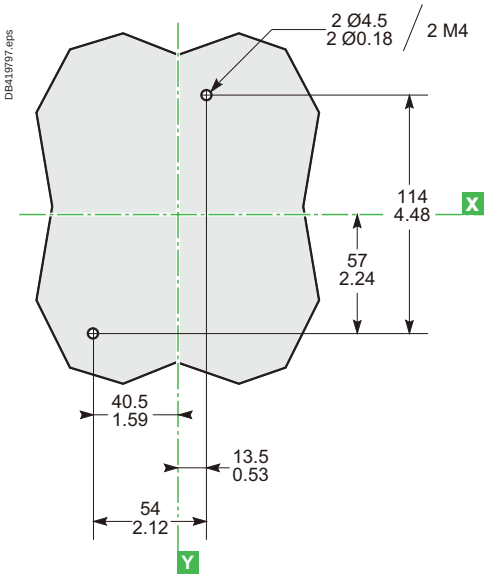

C

Mounting on DIN rail

mm
in.

1P, 2P, 3P, 4P

DB419793.eps

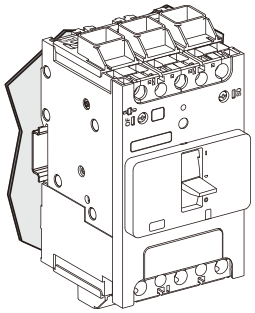

DB419794.eps

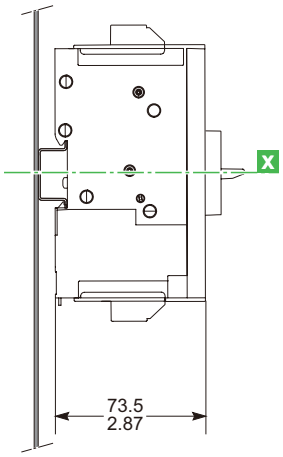

C

PowerPact B-Frame Circuit Breakers

Direct rotary handle

mm
in.

3P

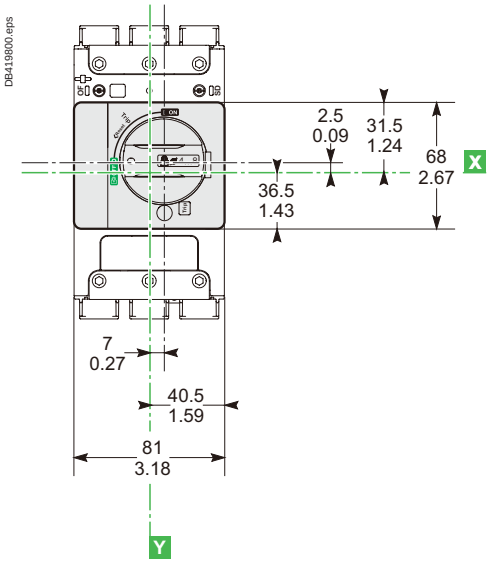

4P

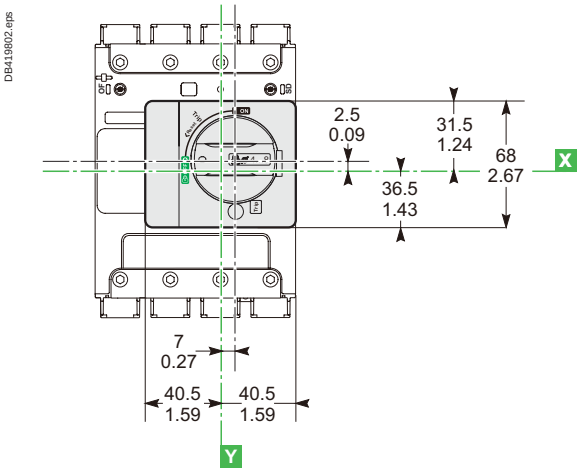

Side view

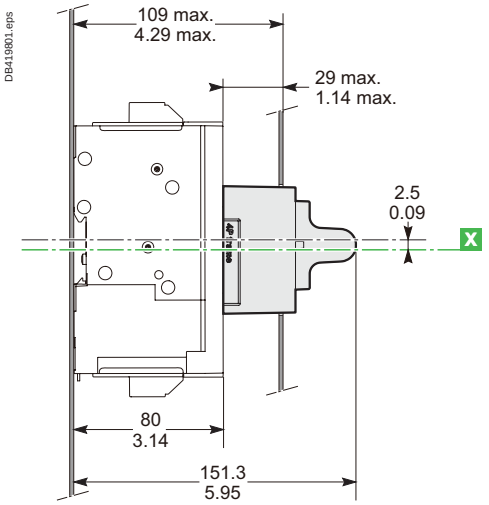

Door cutout for 3P/4P

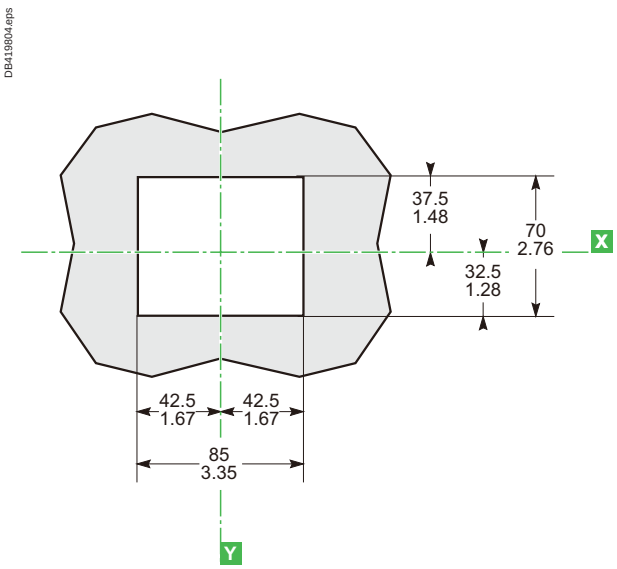

C

PowerPact B-Frame Circuit Breakers

C

Extended rotary handle dimensions

mm / in.

3P

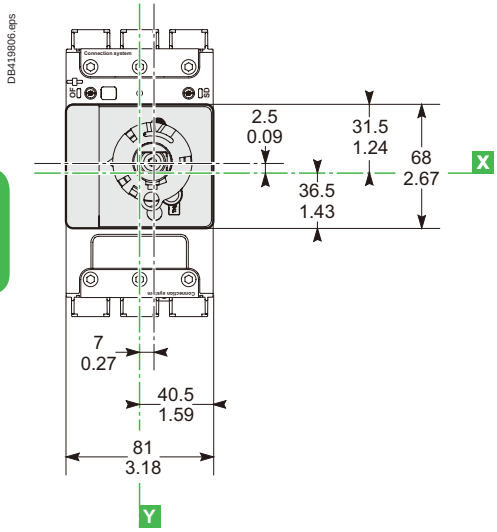

4P

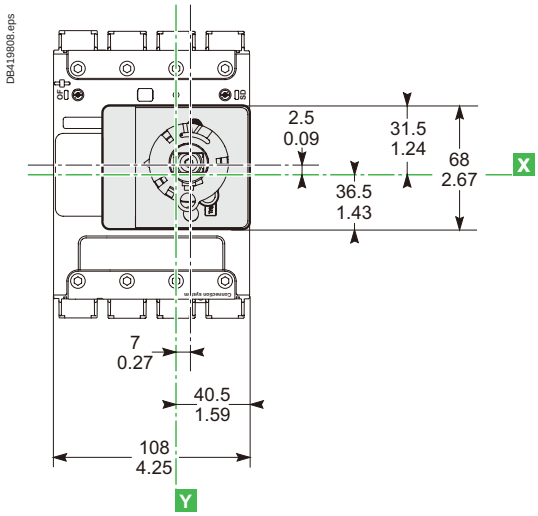

3P/4P

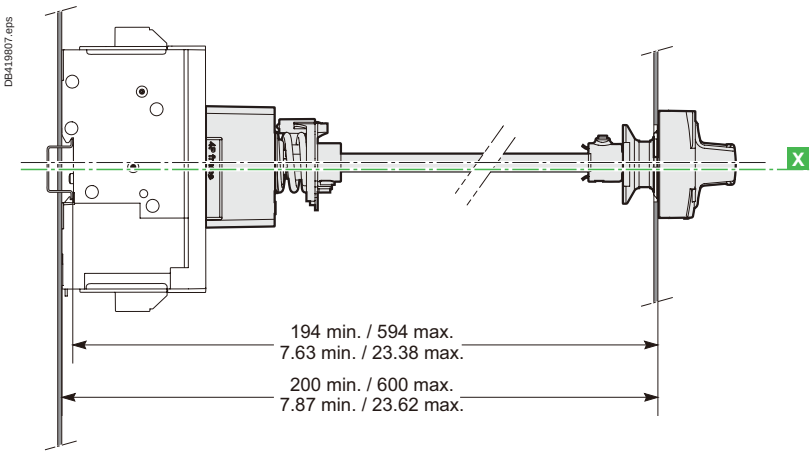

Front -panel cutout

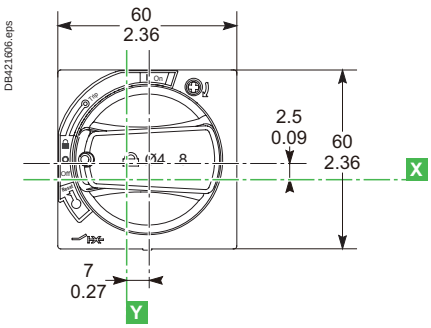

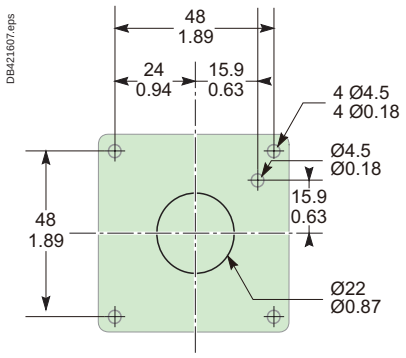

PowerPact B-Frame Circuit Breakers

Lateral rotary handle dimensions

mm
in.

3P

DB419809.eps

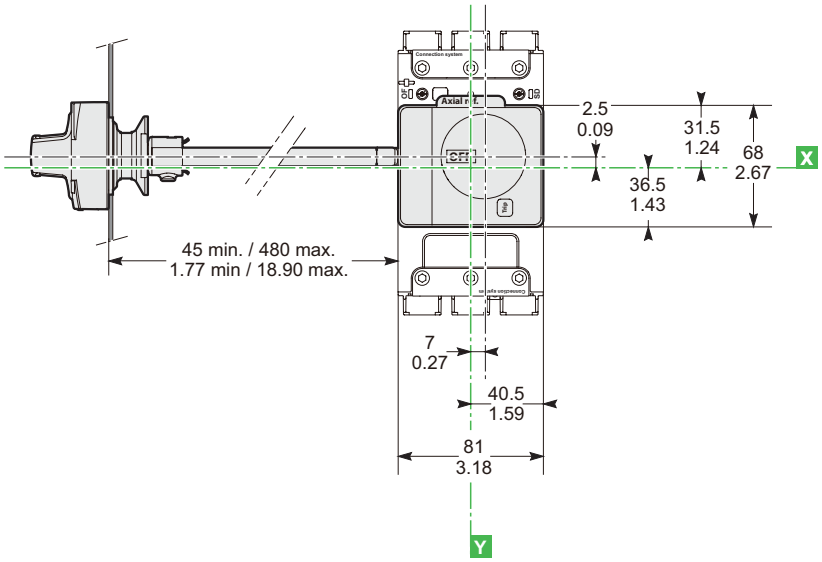

4P

DB419811.eps

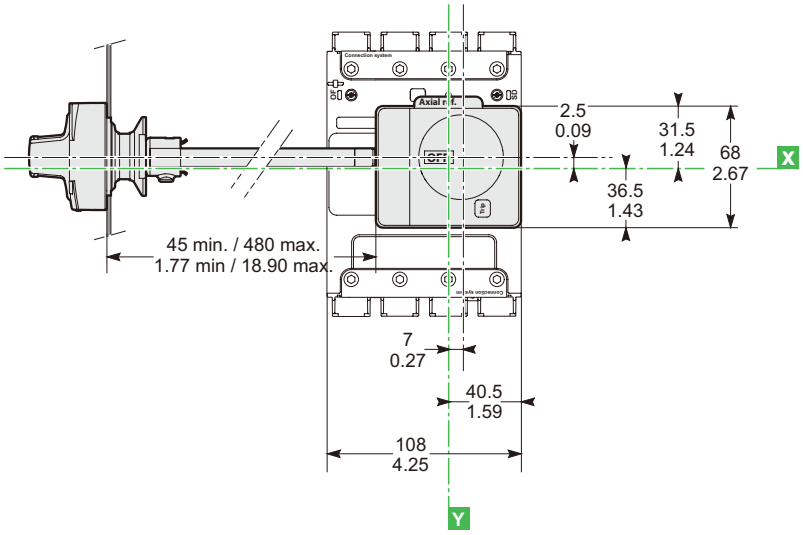

3P / 4P

DB419812.eps

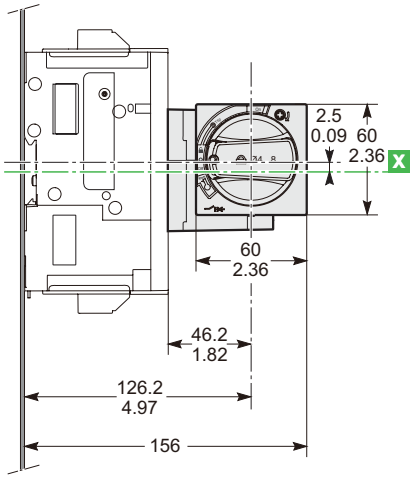

C

PowerPact B-Frame Circuit Breakers

C

Connection with accessories

mm / in.

Power distribution connectors

6 holes

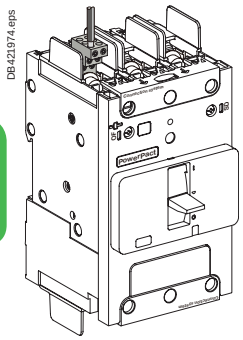

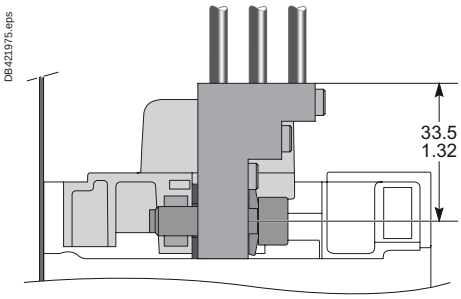

3 holes

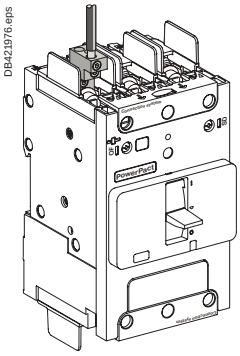

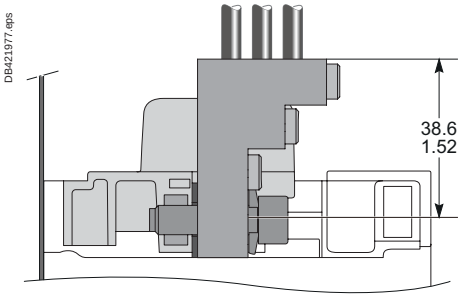

Spreaders

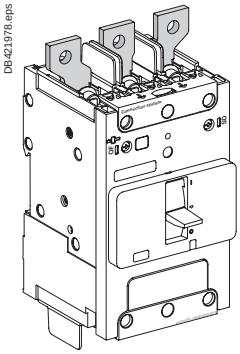

3P

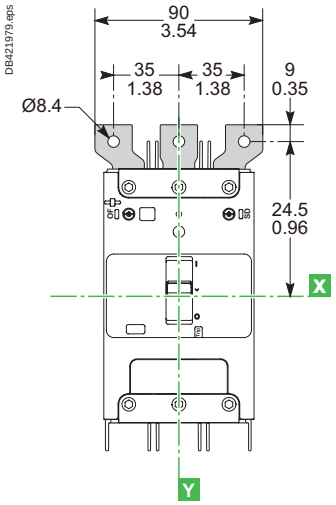

4P

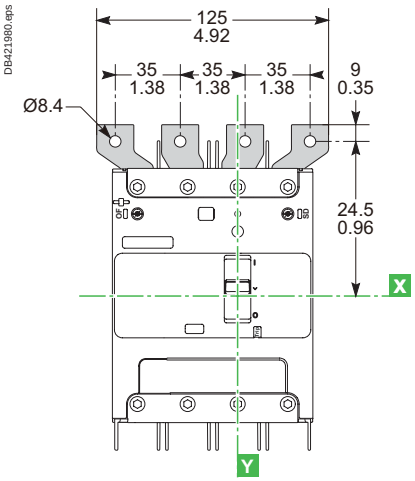

Side view

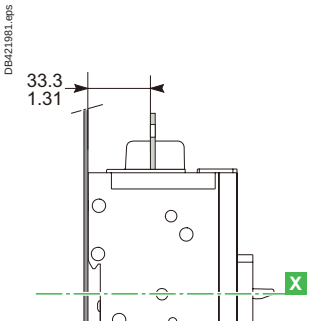

Wiring diagrams

PowerPact B-Frame Auxiliaries D-2

D

Other chapters

Functions and characteristics A-1
Installation recommendations B-1
Dimensions C-1
Additional characteristics E-1
Catalogue numbers F-1
Glossary G-1

PowerPact B-Frame Auxiliaries

Indication contacts OF and SD

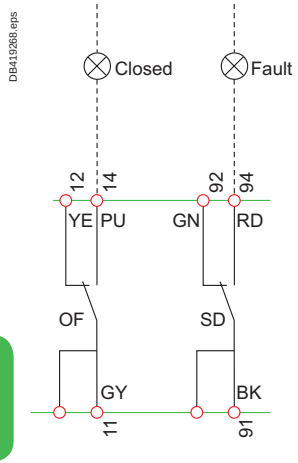

Indication contacts

OF	Device ON/OFF indication contacts
SD	Trip indication contact

Color code for auxiliary wiring

RD: Red
YE: Yellow
BK: Black
GN: Green
PU: Purple
GY: Grey

D

Remote operation (MN/MX voltage release)

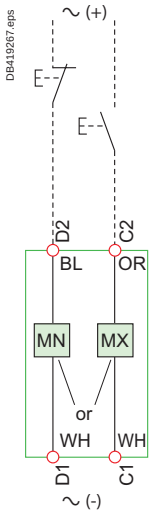

Remote operation

MN	Undervoltage Release
or	
MX	Shunt trip Release

Color code for auxiliary wiring

OR: Orange
BL: Blue
WH: White

The diagram is shown with circuits de-energized, relays in normal position, and all devices open, connected, and charged.
Terminal connections shown as **O** must be connected by the customer.

Additional characteristics

PowerPact Multistandard thermal-magnetic trip circuit breakers

PowerPact B-Frame 15/20 A thermal-magnetic trip.....E-2
PowerPact B-Frame 25/30 A thermal-magnetic trip E-3
PowerPact B-Frame 35/50 A thermal-magnetic trip E-4
PowerPact B-Frame 60/100 A thermal-magnetic trip E-5
PowerPact B-Frame 110/125 A thermal-magnetic trip E-6

Distribution system

Plates for mounting on busbars
Short-circuit withstand capability E-9

E

Other chapters

Functions and characteristics.....A-1
Installation recommendations.....B-1
Dimensions.....C-1
Wiring diagrams.....D-1
Catalogue numbers F-1
Glossary G-1

PowerPact B-Frame 15/20 A thermal-magnetic trip

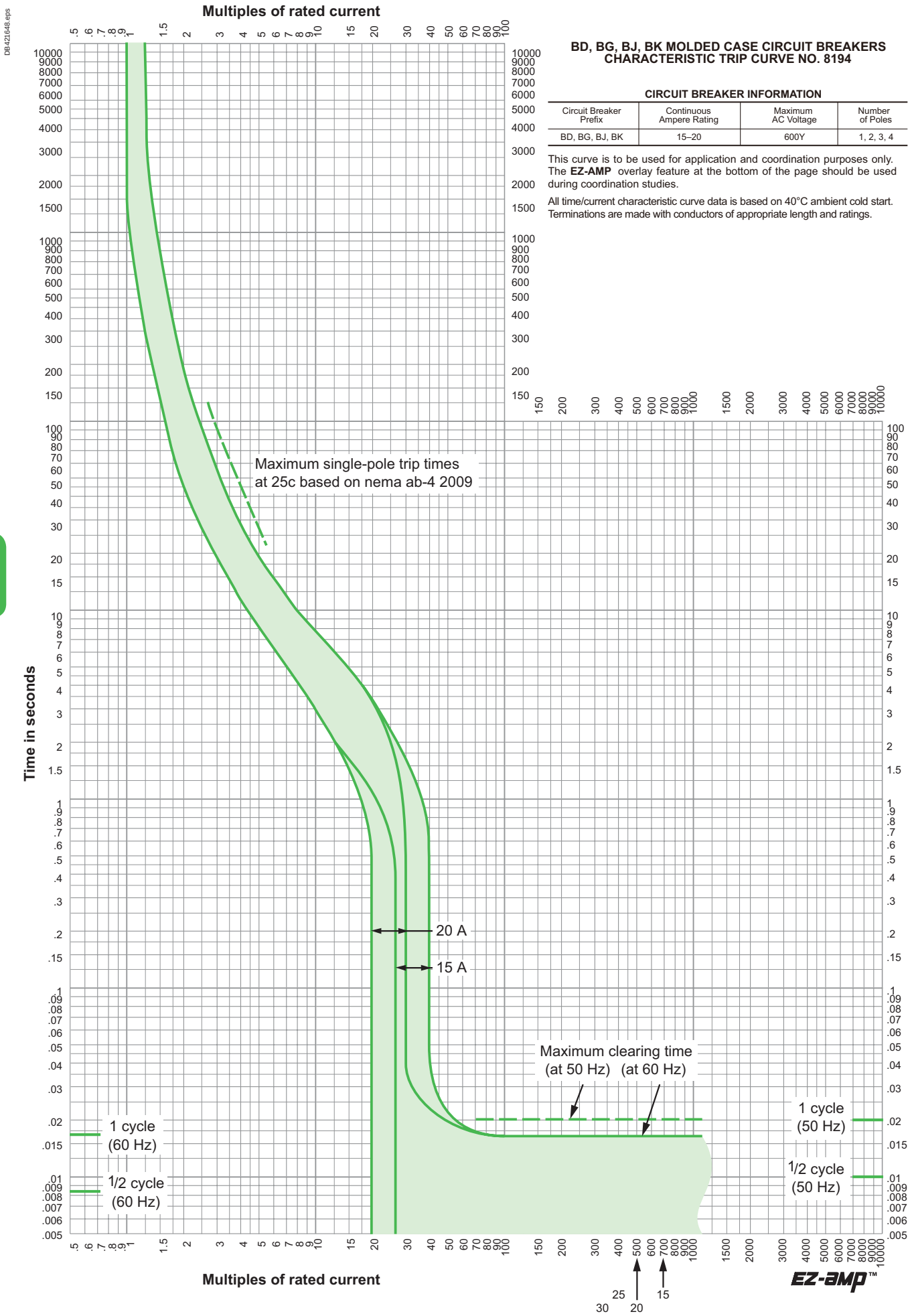

BD, BG, BJ, BK MOLDED CASE CIRCUIT BREAKERS
CHARACTERISTIC TRIP CURVE NO. 8194

CIRCUIT BREAKER INFORMATION

Circuit Breaker Prefix	Continuous Ampere Rating	Maximum AC Voltage	Number of Poles
BD, BG, BJ, BK	15–20	600Y	1, 2, 3, 4

This curve is to be used for application and coordination purposes only. The **EZ-AMP** overlay feature at the bottom of the page should be used during coordination studies.

All time/current characteristic curve data is based on 40°C ambient cold start. Terminations are made with conductors of appropriate length and ratings.

E

Life Is On Schneider Electric

PowerPact B-Frame 25/30 A thermal-magnetic trip

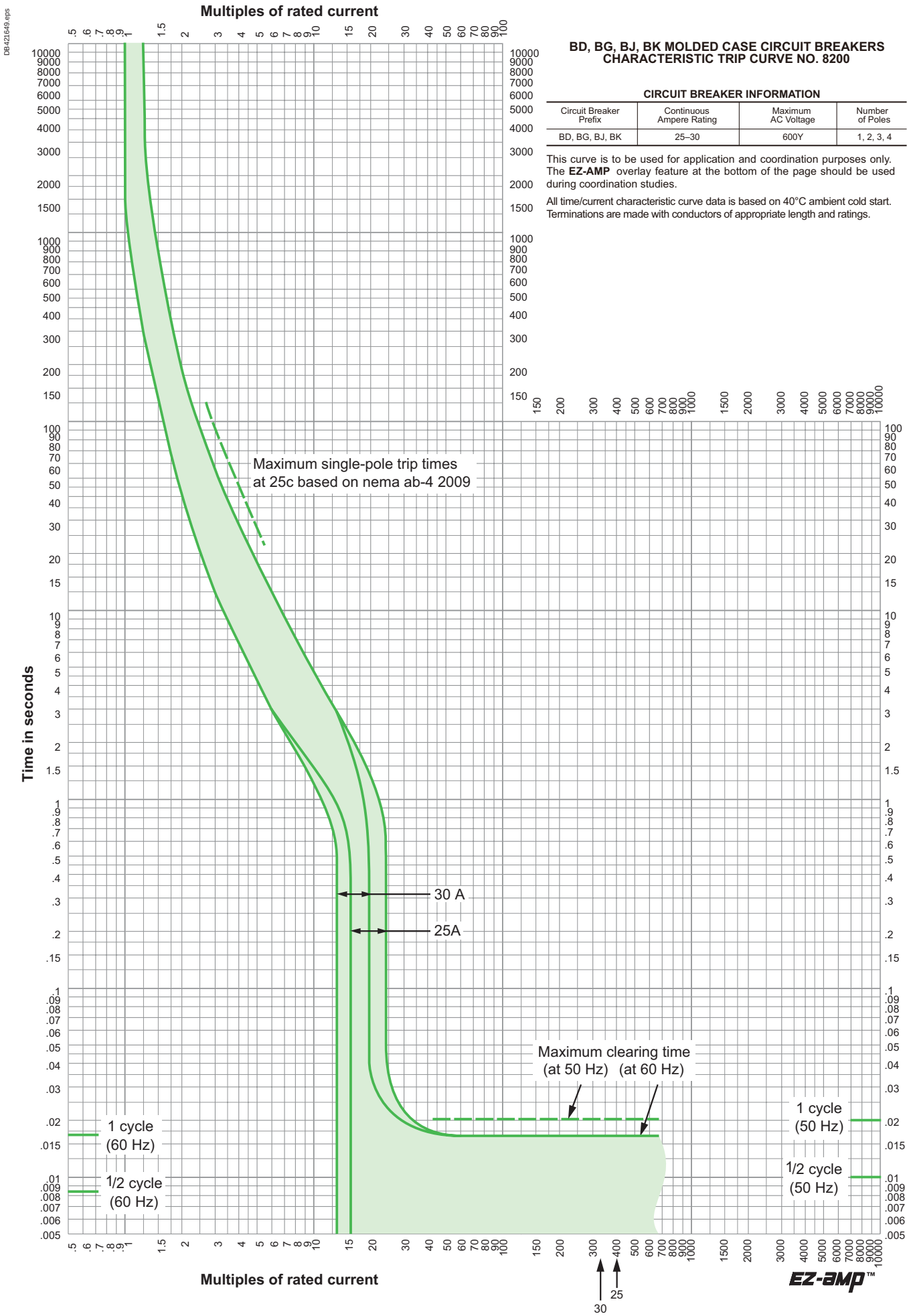

BD, BG, BJ, BK MOLDED CASE CIRCUIT BREAKERS CHARACTERISTIC TRIP CURVE NO. 8200

CIRCUIT BREAKER INFORMATION

Circuit Breaker Prefix	Continuous Ampere Rating	Maximum AC Voltage	Number of Poles
BD, BG, BJ, BK	25–30	600Y	1, 2, 3, 4

This curve is to be used for application and coordination purposes only. The **EZ-AMP** overlay feature at the bottom of the page should be used during coordination studies.

All time/current characteristic curve data is based on 40°C ambient cold start. Terminations are made with conductors of appropriate length and ratings.

E

PowerPact B-Frame 35/50 A thermal-magnetic trip

DB421596.eps

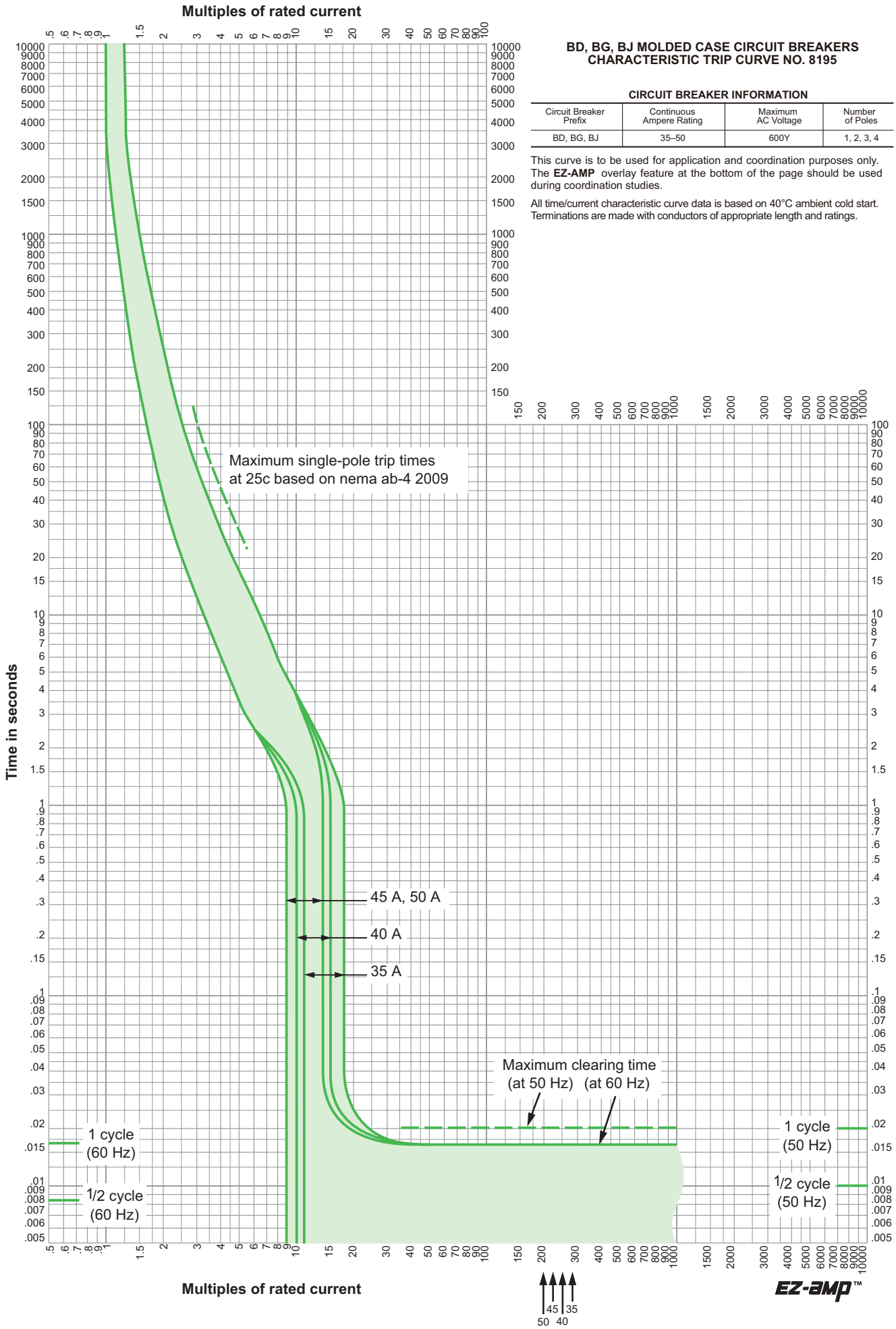

BD, BG, BJ MOLDED CASE CIRCUIT BREAKERS CHARACTERISTIC TRIP CURVE NO. 8195

CIRCUIT BREAKER INFORMATION

Circuit Breaker Prefix	Continuous Ampere Rating	Maximum AC Voltage	Number of Poles
BD, BG, BJ	35–50	600Y	1, 2, 3, 4

This curve is to be used for application and coordination purposes only. The **EZ-AMP** overlay feature at the bottom of the page should be used during coordination studies.

All time/current characteristic curve data is based on 40°C ambient cold start. Terminations are made with conductors of appropriate length and ratings.

E

Life Is On Schneider Electric

PowerPact B-Frame 60/100 A thermal-magnetic trip

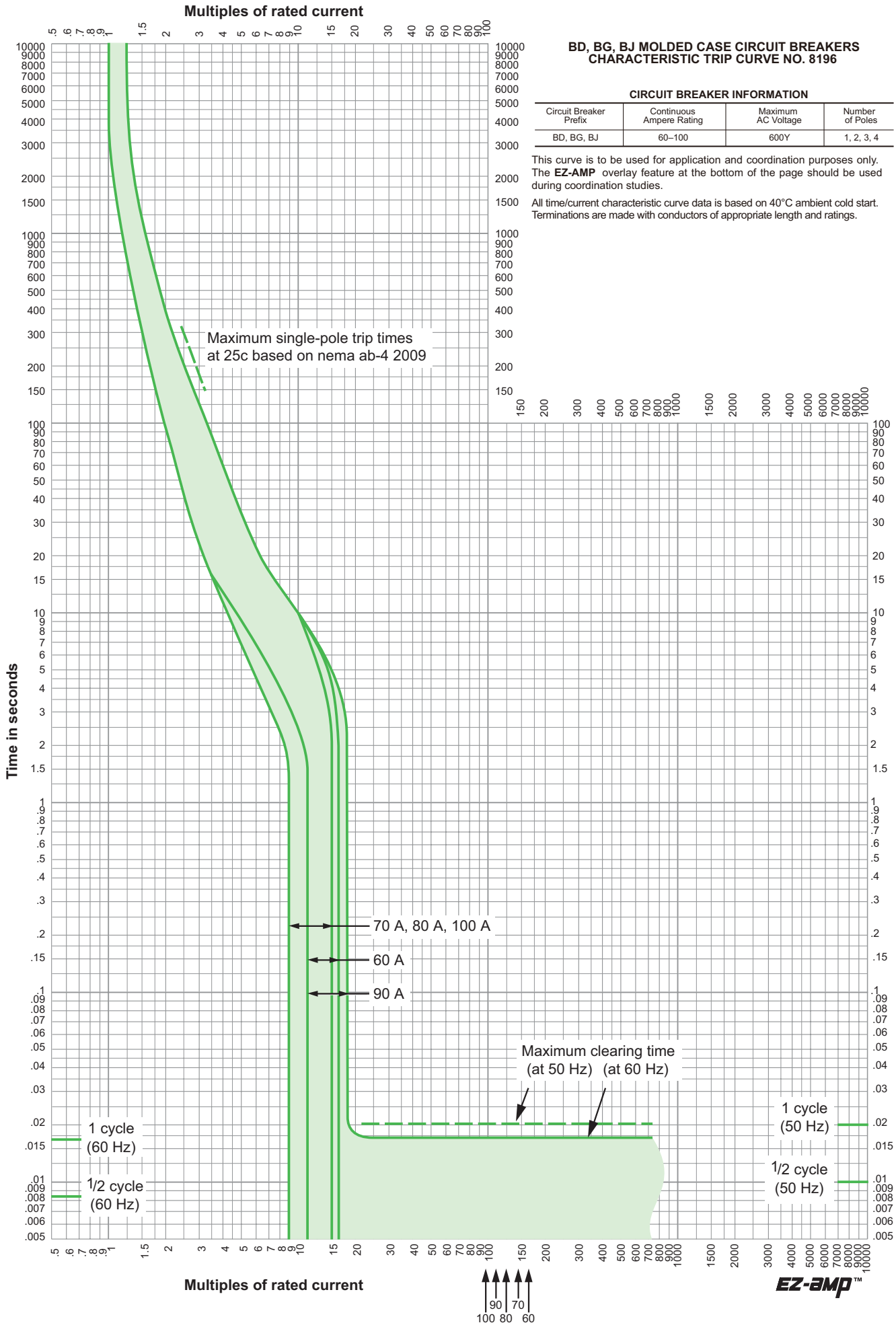

BD, BG, BJ MOLDED CASE CIRCUIT BREAKERS CHARACTERISTIC TRIP CURVE NO. 8196

CIRCUIT BREAKER INFORMATION

Circuit Breaker Prefix	Continuous Ampere Rating	Maximum AC Voltage	Number of Poles
BD, BG, BJ	60–100	600Y	1, 2, 3, 4

This curve is to be used for application and coordination purposes only. The **EZ-AMP** overlay feature at the bottom of the page should be used during coordination studies.

All time/current characteristic curve data is based on 40°C ambient cold start. Terminations are made with conductors of appropriate length and ratings.

E

PowerPact B-Frame 110/125 A thermal-magnetic trip

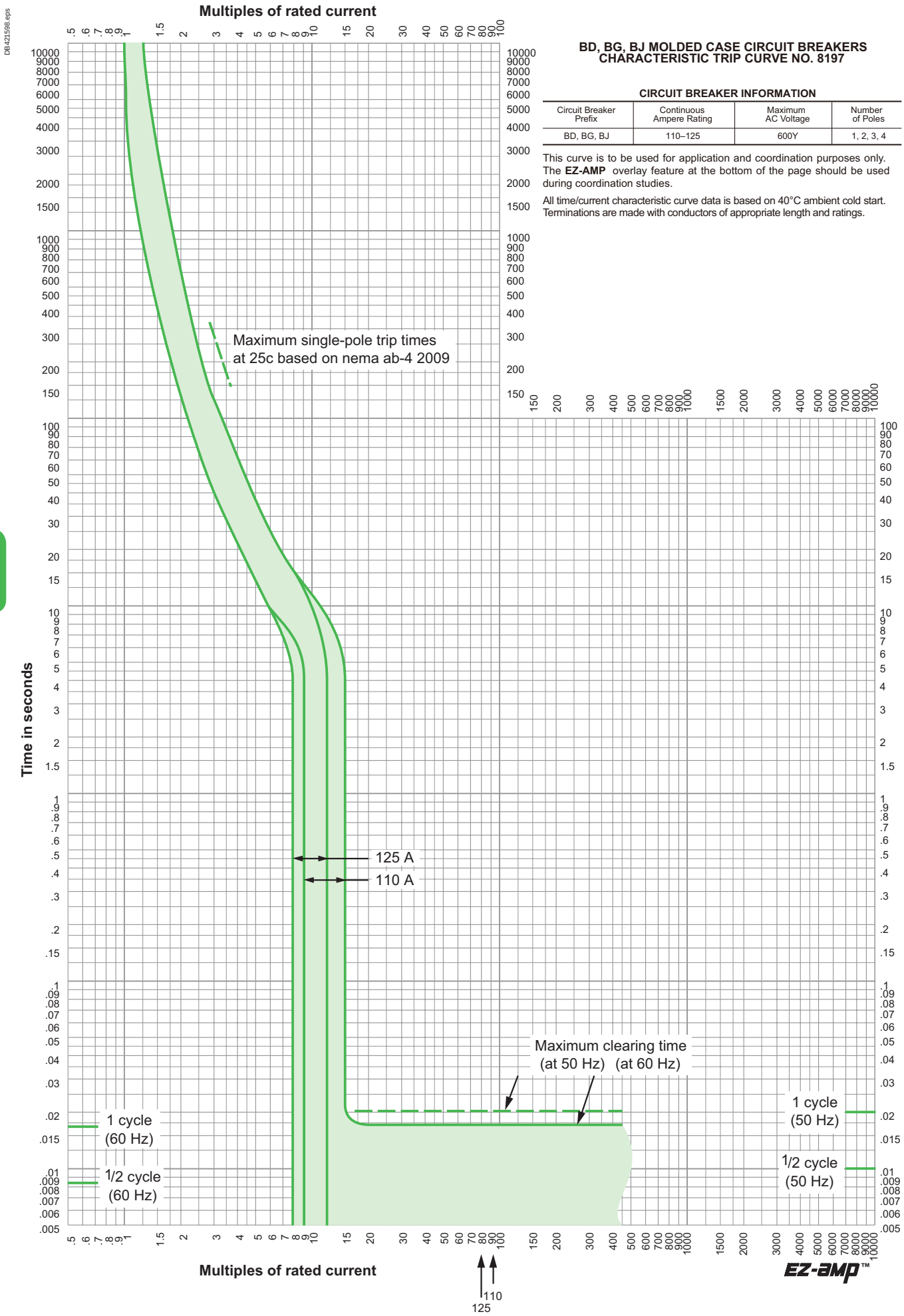

BD, BG, BJ MOLDED CASE CIRCUIT BREAKERS CHARACTERISTIC TRIP CURVE NO. 8197

CIRCUIT BREAKER INFORMATION

Circuit Breaker Prefix	Continuous Ampere Rating	Maximum AC Voltage	Number of Poles
BD, BG, BJ	110–125	600Y	1, 2, 3, 4

This curve is to be used for application and coordination purposes only. The **EZ-AMP** overlay feature at the bottom of the page should be used during coordination studies.

All time/current characteristic curve data is based on 40°C ambient cold start. Terminations are made with conductors of appropriate length and ratings.

E

Life Is On Schneider Electric

PowerPact Multistandard thermal-magnetic trip circuit breakers

B-Frame 125 A

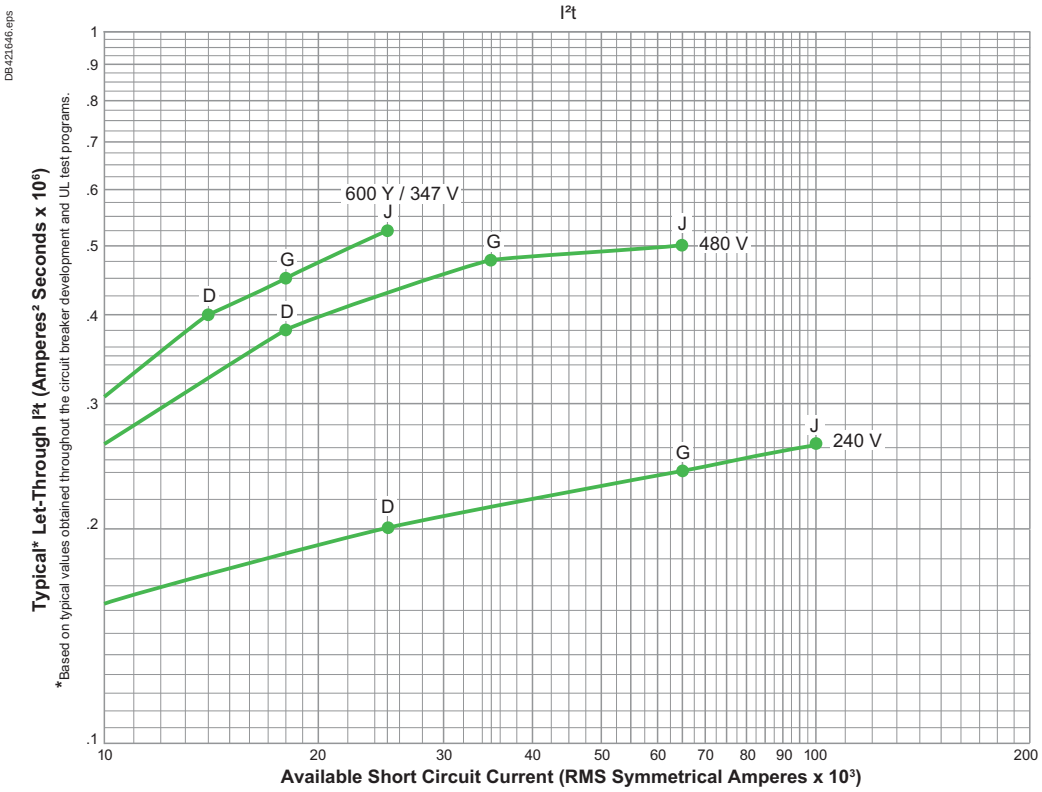

E

PowerPact Multistandard thermal-magnetic trip circuit breakers

B-Frame 125 A

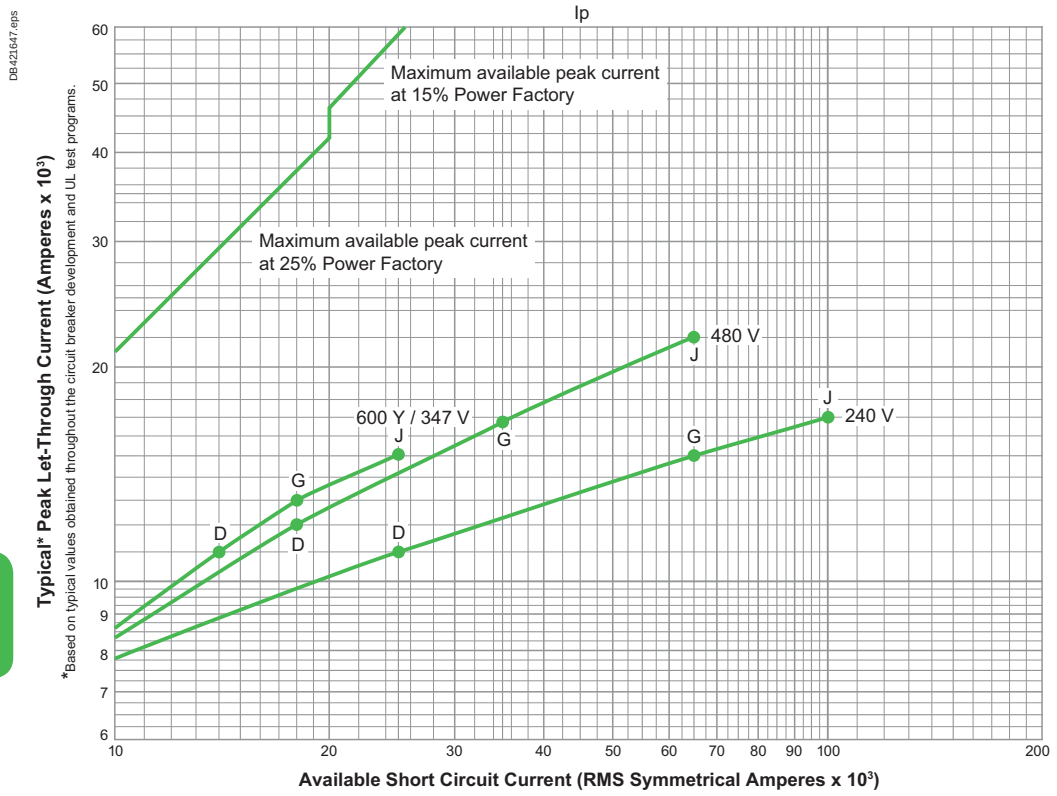

E

Life Is On Schneider Electric

Plates for mounting on busbars Short-circuit withstand capability

Determining the spacing between busbar supports (LA9ZX01495 and LA9ZX01485), according to IEC 60439-1 [1]

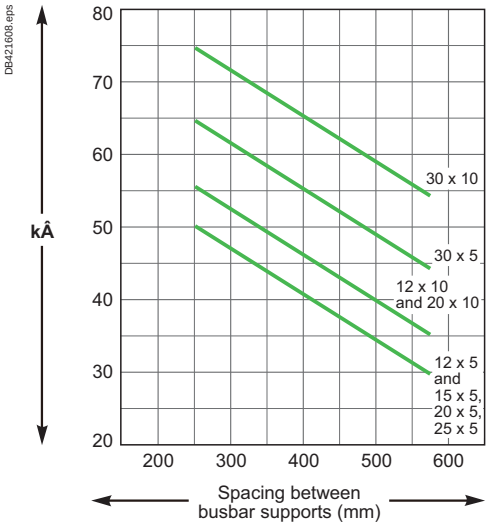

Short-circuit strength diagram according to UL845 (LA9ZX01508)

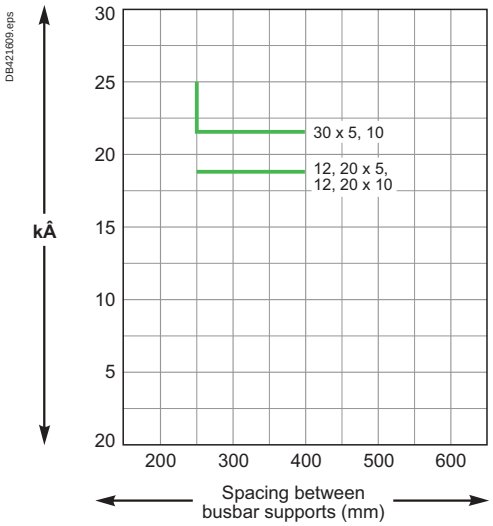

[1] Depending on the short-circuit current.

Load resistance of busbar assemblies in IEC applications

For an ambient temperature of 35 °C and a busbar temperature of 65 °C									
Cross section	**mm²**	**12 x 5**	**15 x 5**	**20 x 5**	**25 x 5**	**30 x 5**	**12 x 10**	**20 x 10**	**30 x 10**
Permissible current	**A**	200	250	320	400	450	360	520	630

In the event of changes in climatic conditions, the following curve indicates the correction factor K_2 to be applied.

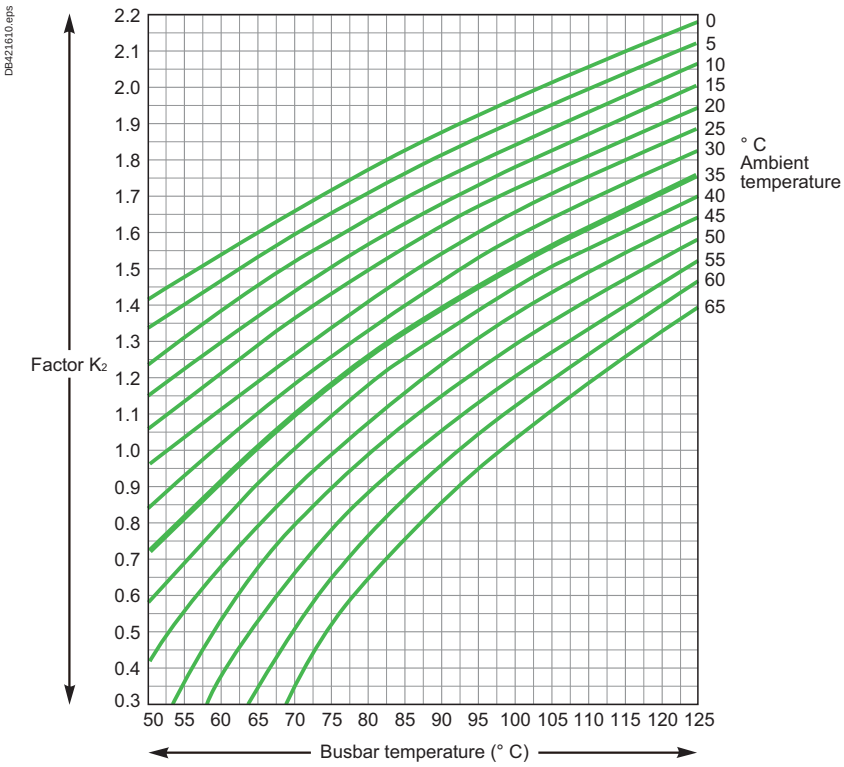

Example: In normal operating conditions, a tinned busbar of 30 x 10 can permanently withstand 630 A.

For a load of 800 A, the correction factor K2 to be applied will be 1.3 (800/630). As a result, the temperature rise in the busbars will reach 82.5 °C.

F

www.schneider-electric.com

Catalogue numbers

PowerPact B-Frame Circuit Breakers

Circuit Breakers F-2
Electrical accessories F-6
Connection accessories F-7
Insulation accessories and rotary handles F-8
Locking and sealing accessories F-9

F

Other chapters

Functions and characteristics A-1
Installation recommendations B-1
Dimensions C-1
Wiring diagrams D-1
Additional characteristics E-1
Glossary G-1

PowerPact B-Frame Circuit Breakers

Circuit Breakers

PowerPact B-Frame 125 A unit-mount thermal-magnetic circuit breakers (277 V AC) single phase rated

With factory sealed trip unit (suitable for reverse connection)

B-Frame, 125 A, 1P, 277 V AC 50/60 Hz with EverLink™ connectors

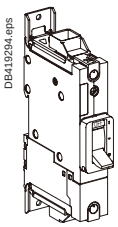

Current rating at 40 °C (A)	Fixed AC magnetic trip (A)		Interrupting rating Standard (80 %) rated		
	Hold	Trip	D - 18 kA	G - 35 kA	J - 65 kA
15	400	600	**BDL16015**	**BGL16015**	**BJL16015**
20	400	600	**BDL16020**	**BGL16020**	**BJL16020**
25	400	600	**BDL16025**	**BGL16025**	**BJL16025**
30	400	600	**BDL16030**	**BGL16030**	**BJL16030**
35	400	600	**BDL16035**	**BGL16035**	**BJL16035**
40	400	600	**BDL16040**	**BGL16040**	**BJL16040**
45	400	600	**BDL16045**	**BGL16045**	**BJL16045**
50	480	720	**BDL16050**	**BGL16050**	**BJL16050**
60	640	960	**BDL16060**	**BGL16060**	**BJL16060**
70	640	960	**BDL16070**	**BGL16070**	**BJL16070**
80	800	1200	**BDL16080**	**BGL16080**	**BJL16080**
90	1000	1500	**BDL16090**	**BGL16090**	**BJL16090**
100	1000	1500	**BDL16100**	**BGL16100**	**BJL16100**
110	1000	1500	**BDL16110**	**BGL16110**	**BJL16110**
125	1000	1500	**BDL16125**	**BGL16125**	**BJL16125**

B-Frame, 125 A, 1P, 277 V AC 50/60 Hz with compression lug/busbar connectors

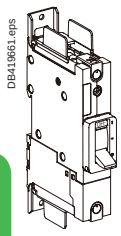

Current rating at 40 °C (A)	Fixed AC magnetic trip (A)		Interrupting rating Standard (80 %) rated		
	Hold	Trip	D - 18 kA	G - 35 kA	J - 65 kA
15	400	600	**BDF16015**	**BGF16015**	**BJF16015**
20	400	600	**BDF16020**	**BGF16020**	**BJF16020**
25	400	600	**BDF16025**	**BGF16025**	**BJF16025**
30	400	600	**BDF16030**	**BGF16030**	**BJF16030**
35	400	600	**BDF16035**	**BGF16035**	**BJF16035**
40	400	600	**BDF16040**	**BGF16040**	**BJF16040**
45	400	600	**BDF16045**	**BGF16045**	**BJF16045**
50	480	720	**BDF16050**	**BGF16050**	**BJF16050**
60	640	960	**BDF16060**	**BGF16060**	**BJF16060**
70	640	960	**BDF16070**	**BGF16070**	**BJF16070**
80	800	1200	**BDF16080**	**BGF16080**	**BJF16080**
90	1000	1500	**BDF16090**	**BGF16090**	**BJF16090**
100	1000	1500	**BDF16100**	**BGF16100**	**BJF16100**
110	1000	1500	**BDF16110**	**BGF16110**	**BJF16110**
125	1000	1500	**BDF16125**	**BGF16125**	**BJF16125**

PowerPact B-Frame 125 A unit-mount thermal-magnetic circuit breakers (480 V AC) Delta rated

With factory sealed trip unit (suitable for reverse connection)

B-Frame, 125 A, 2P, 480 V AC 50/60 Hz with EverLink™ connectors

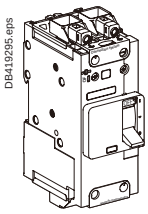

Current rating at 40 °C (A)	Fixed AC magnetic trip (A)		Interrupting rating Standard (80 %) rated		
	Hold	Trip	D - 18 kA	G - 35 kA	J - 65 kA
15	400	600	**BDL26015LU**	**BGL26015LU**	**BJL26015LU**
20	400	600	**BDL26020LU**	**BGL26020LU**	**BJL26020LU**
25	400	600	**BDL26025LU**	**BGL26025LU**	**BJL26025LU**
30	400	600	**BDL26030LU**	**BGL26030LU**	**BJL26030LU**
35	400	600	**BDL26035LU**	**BGL26035LU**	**BJL26035LU**
40	400	600	**BDL26040LU**	**BGL26040LU**	**BJL26040LU**
45	400	600	**BDL26045LU**	**BGL26045LU**	**BJL26045LU**
50	480	720	**BDL26050LU**	**BGL26050LU**	**BJL26050LU**
60	640	960	**BDL26060LU**	**BGL26060LU**	**BJL26060LU**
70	640	960	**BDL26070LU**	**BGL26070LU**	**BJL26070LU**
80	800	1200	**BDL26080LU**	**BGL26080LU**	**BJL26080LU**
90	1000	1500	**BDL26090LU**	**BGL26090LU**	**BJL26090LU**
100	1000	1500	**BDL26100LU**	**BGL26100LU**	**BJL26100LU**
110	1000	1500	**BDL26110LU**	**BGL26110LU**	**BJL26110LU**
125	1000	1500	**BDL26125LU**	**BGL26125LU**	**BJL26125LU**

B-Frame, 125 A, 2P, 480 V AC 50/60 Hz with compression lug/busbar connectors

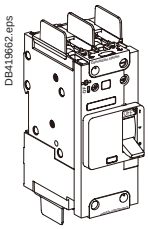

Current rating at 40 °C (A)	Fixed AC magnetic trip (A)		Interrupting rating Standard (80 %) rated		
	Hold	Trip	D - 18 kA	G - 35 kA	J - 65 kA
15	400	600	**BDF26015**	**BGF26015**	**BJF26015**
20	400	600	**BDF26020**	**BGF26020**	**BJF26020**
25	400	600	**BDF26025**	**BGF26025**	**BJF26025**
30	400	600	**BDF26030**	**BGF26030**	**BJF26030**
35	400	600	**BDF26035**	**BGF26035**	**BJF26035**
40	400	600	**BDF26040**	**BGF26040**	**BJF26040**
45	400	600	**BDF26045**	**BGF26045**	**BJF26045**
50	480	720	**BDF26050**	**BGF26050**	**BJF26050**
60	640	960	**BDF26060**	**BGF26060**	**BJF26060**
70	640	960	**BDF26070**	**BGF26070**	**BJF26070**
80	800	1200	**BDF26080**	**BGF26080**	**BJF26080**
90	1000	1500	**BDF26090**	**BGF26090**	**BJF26090**
100	1000	1500	**BDF26100**	**BGF26100**	**BJF26100**
110	1000	1500	**BDF26110**	**BGF26110**	**BJF26110**
125	1000	1500	**BDF26125**	**BGF26125**	**BJF26125**

PowerPact B-Frame Circuit Breakers

Circuit Breakers

PowerPact B-Frame 125 A unit-mount thermal-magnetic circuit breakers (480 V AC) Delta rated

With factory sealed trip unit (suitable for reverse connection)

B-Frame, 125 A, 3P, 480 V AC 50/60 Hz with EverLink™ connectors

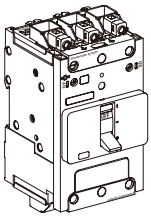
DB418789.eps

Current rating at 40 °C (A)	Fixed AC magnetic trip (A)		Interrupting rating Standard (80 %) rated		
	Hold	Trip	D - 18 kA	G - 35 kA	J - 65 kA
15	400	600	**BDL36015LU**	**BGL36015LU**	**BJL36015LU**
20	400	600	**BDL36020LU**	**BGL36020LU**	**BJL36020LU**
25	400	600	**BDL36025LU**	**BGL36025LU**	**BJL36025LU**
30	400	600	**BDL36030LU**	**BGL36030LU**	**BJL36030LU**
35	400	600	**BDL36035LU**	**BGL36035LU**	**BJL36035LU**
40	400	600	**BDL36040LU**	**BGL36040LU**	**BJL36040LU**
45	400	600	**BDL36045LU**	**BGL36045LU**	**BJL36045LU**
50	480	720	**BDL36050LU**	**BGL36050LU**	**BJL36050LU**
60	640	960	**BDL36060LU**	**BGL36060LU**	**BJL36060LU**
70	640	960	**BDL36070LU**	**BGL36070LU**	**BJL36070LU**
80	800	1200	**BDL36080LU**	**BGL36080LU**	**BJL36080LU**
90	1000	1500	**BDL36090LU**	**BGL36090LU**	**BJL36090LU**
100	1000	1500	**BDL36100LU**	**BGL36100LU**	**BJL36100LU**
110	1000	1500	**BDL36110LU**	**BGL36110LU**	**BJL36110LU**
125	1000	1500	**BDL36125LU**	**BGL36125LU**	**BJL36125LU**

B-Frame, 125 A, 3P, 480 V AC 50/60 Hz with compression lug/busbar connectors

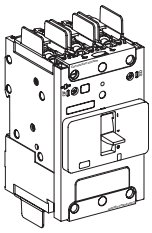
DB419660.eps

Current rating at 40 °C (A)	Fixed AC magnetic trip (A)		Interrupting rating Standard (80 %) rated		
	Hold	Trip	D - 18 kA	G - 35 kA	J - 65 kA
15	400	600	**BDF36015**	**BGF36015**	**BJF36015**
20	400	600	**BDF36020**	**BGF36020**	**BJF36020**
25	400	600	**BDF36025**	**BGF36025**	**BJF36025**
30	400	600	**BDF36030**	**BGF36030**	**BJF36030**
35	400	600	**BDF36035**	**BGF36035**	**BJF36035**
40	400	600	**BDF36040**	**BGF36040**	**BJF36040**
45	400	600	**BDF36045**	**BGF36045**	**BJF36045**
50	480	720	**BDF36050**	**BGF36050**	**BJF36050**
60	640	960	**BDF36060**	**BGF36060**	**BJF36060**
70	640	960	**BDF36070**	**BGF36070**	**BJF36070**
80	800	1200	**BDF36080**	**BGF36080**	**BJF36080**
90	1000	1500	**BDF36090**	**BGF36090**	**BJF36090**
100	1000	1500	**BDF36100**	**BGF36100**	**BJF36100**
110	1000	1500	**BDF36110**	**BGF36110**	**BJF36110**
125	1000	1500	**BDF36125**	**BGF36125**	**BJF36125**

PowerPact B-Frame 125 A unit-mount thermal-magnetic circuit breakers (480 V AC) Delta rated

With factory sealed trip unit (suitable for reverse connection)

B-Frame, 125 A, 4P, 480 V AC 50/60 Hz with EverLink™ connectors

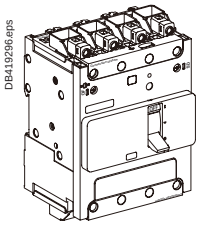

Current rating at 40 °C (A)	Fixed AC magnetic trip (A)		Interrupting rating Standard (80 %) rated		
	Hold	Trip	D - 18 kA	G - 35 kA	J - 65 kA
15	400	600	**BDL46015LU**	**BGL46015LU**	**BJL46015LU**
20	400	600	**BDL46020LU**	**BGL46020LU**	**BJL46020LU**
25	400	600	**BDL46025LU**	**BGL46025LU**	**BJL46025LU**
30	400	600	**BDL46030LU**	**BGL46030LU**	**BJL46030LU**
35	400	600	**BDL46035LU**	**BGL46035LU**	**BJL46035LU**
40	400	600	**BDL46040LU**	**BGL46040LU**	**BJL46040LU**
45	400	600	**BDL46045LU**	**BGL46045LU**	**BJL46045LU**
50	480	720	**BDL46050LU**	**BGL46050LU**	**BJL46050LU**
60	640	960	**BDL46060LU**	**BGL46060LU**	**BJL46060LU**
70	640	960	**BDL46070LU**	**BGL46070LU**	**BJL46070LU**
80	800	1200	**BDL46080LU**	**BGL46080LU**	**BJL46080LU**
90	1000	1500	**BDL46090LU**	**BGL46090LU**	**BJL46090LU**
100	1000	1500	**BDL46100LU**	**BGL46100LU**	**BJL46100LU**
110	1000	1500	**BDL46110LU**	**BGL46110LU**	**BJL46110LU**
125	1000	1500	**BDL46125LU**	**BGL46125LU**	**BJL46125LU**

B-Frame, 125 A, 4P, 480 V AC 50/60 Hz with compression lug/busbar connectors

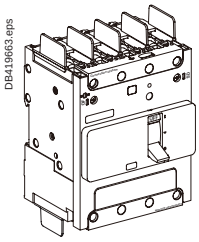

Current rating at 40 °C (A)	Fixed AC magnetic trip (A)		Interrupting rating Standard (80 %) rated		
	Hold	Trip	D - 18 kA	G - 35 kA	J - 65 kA
15	400	600	**BDF46015**	**BGF46015**	**BJF46015**
20	400	600	**BDF46020**	**BGF46020**	**BJF46020**
25	400	600	**BDF46025**	**BGF46025**	**BJF46025**
30	400	600	**BDF46030**	**BGF46030**	**BJF46030**
35	400	600	**BDF46035**	**BGF46035**	**BJF46035**
40	400	600	**BDF46040**	**BGF46040**	**BJF46040**
45	400	600	**BDF46045**	**BGF46045**	**BJF46045**
50	480	720	**BDF46050**	**BGF46050**	**BJF46050**
60	640	960	**BDF46060**	**BGF46060**	**BJF46060**
70	640	960	**BDF46070**	**BGF46070**	**BJF46070**
80	800	1200	**BDF46080**	**BGF46080**	**BJF46080**
90	1000	1500	**BDF46090**	**BGF46090**	**BJF46090**
100	1000	1500	**BDF46100**	**BGF46100**	**BJF46100**
110	1000	1500	**BDF46110**	**BGF46110**	**BJF46110**
125	1000	1500	**BDF46125**	**BGF46125**	**BJF46125**

PowerPact B-Frame Circuit Breakers

Electrical accessories

Electrical auxiliaries

Auxiliary contacts (changeover)

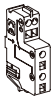
DB418804.eps

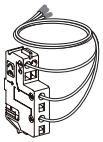
DB418805.eps

Standard OF or SD	**LV426950**
Pre-wired OF [1]	**LV426951**
Pre-wired SD [1]	**LV426952**

Voltage releases

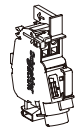
DB418808.eps

Standard	Voltage	MX	MN
AC	24 V 50/60 Hz	**LV426841**	**LV426801**
	48 V 50/60 Hz	**LV426842**	**LV426802**
	110...130 V 50/60 Hz	**LV426843**	**LV426803**
	220...240 V 50 Hz 208...240 V 60 Hz	**LV426844**	**LV426804**
	277 V 60 Hz	**LV426844**	**LV426805**
	380...415 V 50 Hz	**LV426846**	**LV426806**
	440...480 V 60 Hz	**LV426846**	**LV426807**
DC	24 V DC	**LV426841**	**LV426801**
	48 V DC	**LV426842**	**LV426802**
	125 V DC	**LV426843**	**LV426803**
	250 V DC	**LV426844**	**LV426815**

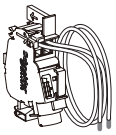
DB418809.eps

Pre-wired [1]	Voltage	MX	MN
AC	24 V 50/60 Hz	**LV426861**	**LV426821**
	48 V 50/60 Hz	**LV426862**	**LV426822**
	110...130 V 50/60 Hz	**LV426863**	**LV426823**
	220...240 V 50 Hz 208...240 V 60 Hz	**LV426864**	**LV426824**
	277 V 60 Hz	**LV426864**	**LV426825**
	380...415 V 50 Hz	**LV426866**	**LV426826**
	440...480 V 60 Hz	**LV426866**	**LV426827**
DC	24 V DC	**LV426861**	**LV426821**
	48 V DC	**LV426862**	**LV426822**
	125 V DC	**LV426863**	**LV426823**
	250 V DC	**LV426864**	**LV426835**

Time delay unit for undervoltage release (MN)

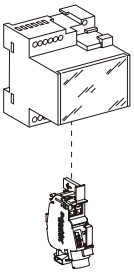
DB421993.eps

MN 48 V 50/60 Hz with ÿxed time delay		
Composed of:	MN 48 V DC	**LV426802**
	Delay unit 48 V 50/60 Hz	**LV429426**
MN 220-240 V 50/60 Hz with ÿxed time delay		
Composed of:	MN 250 V DC	**LV426815**
	Delay unit 220-240 V 50/60 Hz	**LV429427**
MN 48 V DC/AC 50/60 Hz with adjustable time delay		
Composed of:	MN 48 V DC	**LV426802**
	Delay unit 48 V DC/AC 50/60 Hz	**33680**
MN 110-130 V DC/AC 50/60 Hz with adjustable time delay		
Composed of:	MN 125 V DC	**LV426803**
	Delay unit 100-130 V DC/AC 50/60 Hz	**33681**
MN 220-250 V DC/AC 50/60 Hz with adjustable time delay		
Composed of:	MN 250 V DC	**LV426815**
	Delay unit 200-250 V DC/AC 50-60 Hz	**33682**

[1] Cable: 1 meter long - AWG 18 - 480 V UL certified.

F

PowerPact B-Frame Circuit Breakers

Connection accessories

Connection accessories

EverLink lug connectors				
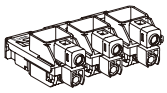 DB418794.eps	For 1 pole			**LV426972**
	For 2 poles with control wire terminal			**LV426973**
	For 3 poles with control wire terminal			**LV426974**
	For 4 poles with control wire terminal			**LV426975**
Compression lug / busbar connection kits			Qty per kit	
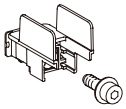 DB418791.eps	B-Frame terminal nut insert-metric with screws (BD/BG/BJ)	M6	2	**LV426962**
			3	**LV426963**
Mechanical lug connection kits			Qty per kit	
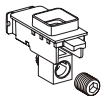 DB418793.eps	Al lugs for use with Al or Cu wires (BD/BG/BJ)	2.5 - 70 mm² (14 - 2/0 AWG)	2	**LV426966**
			3	**LV426967**
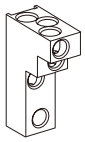 DB419664.eps	Al lugs for 3 cables with 2 interphase barriers [*]	2.5 - 35 mm² (#14 - #2 AWG)	3	**PDC3BD2**
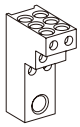 DB419665.eps	Al lugs for 6 cables with 2 interphase barriers [*]	2.5 - 16 mm² (#14 - #6 AWG)	3	**PDC6BD6**
Copper crimp lugs for copper cables			Qty per kit	
DB418795.eps	For cable 70² solid/stranded / 50² fine stranded [1]		3	**LV426978**
			4	**LV426979**
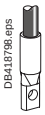 DB418798.eps	For cable 6 - 1/0 AWG		2	**LV426986**
			3	**LV426987**
Aluminum crimp lugs for copper or aluminum cables			Qty per kit	
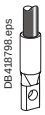 DB418798.eps	For cable 8 - 1/0 AWG		2	**LV426988**
			3	**LV426989**
Terminal extensions				
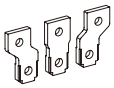 DB418861.eps	Spreaders from 27 to 35 mm pitch [1]	3 poles	1 set	**LV426940**
		4 poles	1 set	**LV426941**
Torque limiting breakaway bits			Qty per kit	
DB418799.eps	9 N.m - Green		6	**LV426990**
			8	**LV426991**
	5 N.m - Yellow		6	**LV426992**
			8	**LV426993**

[1] Supplied with 2 or 3 interphase barriers.

[*] Available Q3 2017.

F

PowerPact B-Frame Circuit Breakers

Insulation accessories and rotary handles

Insulation accessories

Long terminal shields

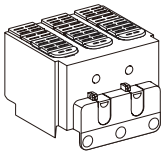

Used with compression lug / busbar connectors or mechanical lugs		Qty per kit	
Long terminal shield IP40	2 poles	1	**LV426911**
	3 poles	1	**LV426912**
	4 poles	1	**LV426913**

Interphase barriers

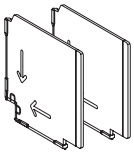

Used with compression lug / busbar connectors or mechanical lugs			
Interphase barriers		6	**LV426920**

Rear insulation screen

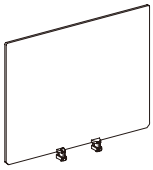

Rear insulation screen	2 poles	2	**LV426921**
	3 poles	2	**LV426922**
	4 poles	2	**LV426923**

Rotary handles

Direct

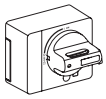

Standard black handle	**LV426930**
Red handle on yellow bezel	**LV426931**

Door mounted

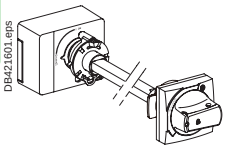

Standard black handle IP54	**LV426932**
Red handle on yellow bezel IP54	**LV426933**
Red handle on yellow bezel IP65	**LV426934**

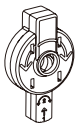

Open door shaft operator	**LV426937**

Laser tool	**GVAPL01**

Side mounted

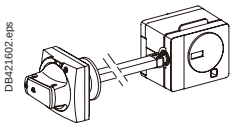

Standard black handle IP54	**LV426935**
Red handle on yellow bezel IP54	**LV426936**

Universal handle

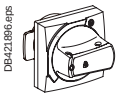

Black handle IP54	**LV426997**
Red handle on yellow font IP54	**LV426998**
Red handle on yellow font IP65	**LV426999**

PowerPact B-Frame Circuit Breakers

Locking and sealing accessories

Locking systems

DB418803.eps 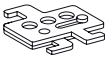	Handle padlocking device [1]	Removable (lock OFF only)	**29370**
DB419875.eps		Fixed (lock OFF or ON)	**LV426905**
DB421603.eps 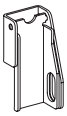		Fixed (lock OFF only)	**LV426906**

Sealing accessories

DB419668.eps 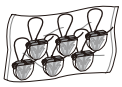	Bag of accessories	**LV429375**

[1] Rotary handle has integral padlocking capability.

F

G

Glossary

Accessories G-2
Circuit breaker characteristics (IEC 60947-2) G-2
Components G-4
Controls G-5
Discrimination / Cascading G-5
Environment G-6
Harmonics G-7
Measurements G-7
Protection G-8
Relays and auxiliary contacts G-8
Switchgear G-8
Trip units G-9

G

Other chapters
Functions and characteristics A-1
Installation recommendations B-1
Dimensions C-1
Wiring diagrams D-1
Additional characteristics E-1
Catalogue numbers F-1

Glossary

For each major section (Accessories, Switchgear, etc.) and for each item (Adapter for plug-in base, Connection terminal, etc.), this glossary provides:
- the reference standard
- the standardised IEC symbol
- the definition.

Text in quotation marks is drawn from the standards.

Accessories

Bare-cable connector	Conducting part of the circuit breaker intended for connection to power circuits. On PowerPact, you can use Everlink lug or an aluminum part that screws to the connection terminals of the circuit breaker. There are one or more holes (single or multiple cable connector) for the ends of bare cables.
Connection terminals	Flat copper surface, linked to the conducting parts of the circuit breaker and to which power connections are made using bars, connectors or lugs.
Spreaders	Set of three (3P device) or four (4P device) flat, conducting parts made of copper. They are screwed to the circuit breaker terminals to increase the pitch between poles.

Circuit breaker characteristics (IEC 60947-2)

Breaking capacity	Value of prospective current that a switching device is capable of breaking at a stated voltage under prescribed conditions of use and behaviour. Reference is generally made to the ultimate breaking capacity (Icu) and the service breaking capacity (Ics).
Degree of protection (IP) IEC 60529	Defines device protection against the penetration of solid objects and liquids, using two digits specified in standard IEC 60259. Each digit corresponds to a level of protection, where 0 indicates no protection. ■ First digit (0 to 6): protection against penetration of solid foreign objects. 1 corresponds to protection against objects with a diameter > 50 mm, 6 corresponds to total protection against dust. ■ Second digit (0 to 8): protection against penetration of liquids (water). 1 corresponds to protection against falling drops of water (condensation), 8 corresponds to continuous immersion. The enclosure of PowerPact circuit breakers provides a minimum of IP40 (protection against objects > 1 mm) and can reach IP56 (protection against dust and powerful water jets) depending on the installation conditions.
Degree of protection against external mechanical impacts (IK)	Defines the aptitude of an object to resist mechanical impacts on all sides, indicated by a number from 0 to 10 (standard IEC 62262). Each number corresponds to the impact energy (in Joules) that the object can handle according to a standardised procedure. 0 corresponds to no protection, 1 to an impact energy of 0.14 Joules, 10 to an impact energy of 20 Joules. PowerPact provide IK07 (2 Joules) and can provide IK08 (5 Joules) depending on the installation conditions.
Durability IEC 60947-1	The term "durability" is used in the standards instead of "endurance" to express the expectancy of the number of operating cycles which can be performed by the equipment before repair or replacement of parts. The term "endurance" is used for specifically defined operational performance.
Electrical durability IEC 60947-1	With respect to its resistance to electrical wear, equipment is characterised by the number of loaded operating cycles, corresponding to the service conditions given in the relevant product standard, which can be made without replacement.
Frame size	"A term designating a group of circuit breakers, the external physical dimensions of which are common to a range of current ratings. Frame size is expressed in amperes corresponding to the highest current rating of the group. Within a frame size, the width may vary according to the number of poles. This definition does not imply dimensional standardization." PowerPact has four frame sizes covering 125 A, 150 A, 250 A and 600 A.

Insulation class	Defines the type of device insulation in terms of earthing and the corresponding safety for the user, in one of three classes. ■ Class I. The device is earthed. Any electrical faults, internal or external, or caused by the load, are cleared via the earthing circuit, thus ensuring user safety. ■ Class II. The device is not connected to a protective conductor. User safety is ensured by reinforced insulation around the live parts (an insulating case and no contact with live parts, i.e. plastic buttons, molded connections, etc.) or double insulation. ■ Class III. The device may be connected only to SELV (safety extra-low voltage) circuits. The PowerPact are class II devices (front) and may be installed through the door in class II switchboards (standards IEC 61140 and IEC 60664-1), without reducing insulation, even with a rotary handle or motor mechanism module.
Making capacity	Value of prospective making current that a switching device is capable of making at a stated voltage under prescribed conditions of use and behaviour. Reference is generally made to the short-circuit making capacity Icm.
Maximum break time	Maximum time after which breaking is effective, i.e. the contacts separated and the current completely interrupted.
Mechanical durability IEC 947-1	With respect to its resistance to mechanical wear, equipment is characterised by the number of no-load operating cycles which can be effected before it becomes necessary to service or replace any mechanical parts.
Non-tripping time	This is the minimum time during which the protective device does not operate in spite of pick-up overrun, if the duration of the overrun does not exceed the corresponding voluntary time delay.
Pollution degree of environment conditions IEC 60947-1 IEC 60664-1	"Conventional number based on the amount of conductive or hygroscopic dust, ionized gas or salt and on the relative humidity and its frequency of occurrence, resulting in hygroscopic absorption or condensation of moisture leading to reduction in dielectric strength and/or surface resistivity". Standard IEC 60947-1 distinguishes four pollution degrees. ■ Degree 1. No pollution or only dry, non-conductive pollution occurs. ■ Degree 2. Normally, only non-conductive pollution occurs. Occasionally, however, a temporary conductivity caused by condensation may be expected. ■ Degree 3. Conductive pollution occurs, or dry, non-conductive pollution occurs which becomes conductive due to condensation. ■ Degree 4. The pollution generates persistent conductivity caused, for instance, by conductive dust or by rain or snow. PowerPact meets degree 3, which corresponds to industrial applications.
Prospective short-circuit current	Current that would flow through the poles if they remained fully closed during the short-circuit.
Rated current (In)	This is the current that the device has been certified to carry continuously within all parameters described by the standard.
Rated impulse withstand voltage (Uimp)	"The peak value of an impulse voltage of prescribed form and polarity which the equipment is capable of withstanding without failure under specified conditions of test and to which the values of the clearances are referred. The rated impulse withstand voltage of an equipment shall be equal to or higher than the values stated for the transient overvoltages occurring in the circuit in which the equipment is fitted".
Rated insulation voltage (Ui)	"The rated insulation voltage of an equipment is the value of voltage to which dielectric tests and creepage distances are referred. In no case shall the maximum value of the rated operational voltage exceed that of the rated insulation voltage".
Rated operational current (Ie)	"A rated operational current of an equipment is stated by the manufacturer and takes into account the rated operational voltage, the rated frequency, the rated duty, the utilization category and the type of protective enclosure, if appropriate".
Rated operational voltage (Ue)	"A value of voltage which, combined with a rated operational current, determines the application of the equipment and to which the relevant tests and the utilisation categories are referred. For multipole equipment, it is generally stated as the voltage between phases". This is the maximum continuous voltage at which the equipment may be used.

Glossary

Rated short-time withstand current (Icw)	"Value of short-time withstand current, assigned to the equipment by the manufacturer, that the equipment can carry without damage, under the test conditions specified in the relevant product standard". Generally expressed in kA for 0.5, 1 or 3 seconds. This is an essential characteristic for air circuit breakers. It is not significant for molded-case circuit breakers for which the design targets fast opening and high limiting capacity.
Service breaking capacity (Ics)	Expressed as a percentage of Icu, it provides an indication on the robustness of the device under severe conditions. It is confirmed by a test with one opening and one closing/opening at Ics, followed by a check that the device operates correctly at its rated current, i.e. 50 cycles at In, where temperature rise remains within tolerances and the protection system suffers no damage.
Short-circuit making capacity (Icm)	Value indicating the capacity of the device to make and carry a high current without repulsion of the contacts. It is expressed in kA peak.
Suitability for isolation	This capability means that the circuit breaker meets the conditions below. ■ In the open position, it must withstand, without flashover between the upstream and downstream contacts, the impulse voltage specified by the standard as a function of the Uimp indicated on the device. ■ It must indicate contact position by one or more of the following systems: □ position of the operating handle □ separate mechanical indicator □ visible break of the moving contacts ■ Leakage current between each pole, with the contacts open, at a test voltage of 1.1 x the rated operating voltage, must not exceed: □ 0.5 mA per pole for new devices □ 2 mA per pole for devices already subjected to normal switching operations □ 6 mA, the maximum value that must never be exceeded. ■ It must not be possible to install padlocks unless the contacts are open. Locking in the closed position is permissible for special applications. PowerPact complies with this requirement by positive contact indication.
Suitable for isolation with positive contact indication (see also Suitability for isolation, page G2)	Suitability for isolation is defined here by the mechanical reliability of the position indicator of the operating mechanism, where: ■ the isolation position corresponds to the O (OFF) position ■ the operating handle cannot indicate the "OFF" position unless the contacts are effectively open. The other conditions for isolation must all be fulfilled: ■ locking in the open position is possible only if the contacts are effectively open ■ leakage currents are below the standardised limits ■ overvoltage impulse withstand between upstream and downstream connections.
Ultimate breaking capacity (Icu)	Expressed in kA, it indicates the maximum breaking capacity of the circuit breaker. It is confirmed by a test with one opening and one closing/opening at Icu, followed by a check that the circuit is properly isolated. This test ensures user safety.

G

Components

ASIC (Application Specific Integrated Circuit)	Integrated circuit designed, built and intended for a specific application. It carries out repetitive sequences of instructions engraved in the silicon chip. For that reason, it is extremely reliable because it cannot be modified and is not affected by environment conditions. Micrologic trip units use an ASIC for the protection functions. The ASIC cyclically polls the network status at a high frequency, using the values supplied by captors. Comparison with the settings forms the basis for orders to the electronic trip units.
Microprocessor	A microprocessor is a more general purpose device than an ASIC. In Micrologic, a microprocessor is used for measurements and it can be programmed. It is not used for the main protection functions that are carried out by the ASIC.

Controls

CNOMO machine-tool rotary handle	Handle used for machine-tool control enclosures and providing IP54 and IK08.
Direct rotary handle	This is an optional control handle for the circuit breaker. It has the same three positions I (ON), O (OFF) and TRIPPED as the toggle control. It provides IP40, IK07 and the possibility, due to its extended travel, of using early-make and early-break contacts. It maintains suitability for isolation and offers optional locking using a keylock or a padlock.
Emergency off	In a circuit equipped with a circuit breaker, this function is carried out by an opening mechanism using an MN undervoltage release or an MX shunt trip in conjunction with an emergency off button.
Extended rotary handle	Rotary handle with an extended shaft to control devices installed at the rear of switchboards or control panels. It has the same characteristics as direct rotary handles. It offers multiple locking possibilities using a padlock or a door interlock.
Side rotary handle	Rotary handle with a side shaft to control devices installed in the switchboards. It has the same characteristics as direct rotary handles. It offers multiple locking possibilities using a padlock.
Failsafe remote tripping	Remote tripping is carried out by an opening mechanism using an MN undervoltage release in conjunction with an emergency off button. If power is lost, the protection device opens the circuit breaker.

Discrimination / Cascading

Cascading /Series Ratings	Cascading implements the current-limiting capacity of a circuit breaker, making it possible to install downstream circuit breakers with lower performance levels. The upstream circuit breaker reduces any high short-circuit currents. This makes it possible to install downstream circuit breakers with breaking capacities less than the prospective short-circuit current at their point of installation. The main advantage of cascading is to reduce the overall cost of electrical distribution equipment. Because the current is limited throughout the circuit downstream of the limiting circuit breaker, cascading applies to all the devices located downstream.
Current discrimination	Discrimination based on the difference between the current-protection settings of the circuit breakers. The difference in settings between two successive circuit breakers in a circuit must be sufficient to allow the downstream breaker to clear the fault before the upstream breaker trips.
Discrimination	Discrimination is ensured between upstream and downstream circuit breakers if, when a fault occurs, only the circuit breaker placed immediately upstream of the fault trips. Discrimination is the key to ensuring the continuity of service of an installation.
Energy discrimination	This function is specific to PowerPact and supplements the other types of discrimination.
Partial discrimination	Discrimination is partial if the conditions for total discrimination are not met up to the ultimate short-circuit current Icu, but only up to a lesser value. This value is called the discrimination limit. If a fault exceeds the discrimination limit, both circuit breakers trip.
Time discrimination	Discrimination based on the difference between the time-delay settings of the circuit breakers. The upstream trip unit is delayed to provide the downstream breaker the time required to clear the fault.
Total discrimination	Total discrimination is ensured between upstream and downstream circuit breakers if, for all fault values, from overloads up to solid short-circuits, only the downstream circuit breaker trips and the upstream circuit breaker remains closed.

Environment

EMC (Electromagnetic compatibility)	EMC is the capacity of a device not to disturb its environment during operation (emitted electromagnetic disturbances) and to operate in a disturbed environment (electromagnetic disturbances affecting the device). The standards define various classes for the types of disturbances. Micrologic trip units comply with annexes F and J in standard IEC IE60947-2.
Power loss Pole resistance	The flow of current through the Circuit breaker poles produces Joule-effect losses caused by the resistance of the poles.
Product environmental profile (PEP) LCA: Life-cycle assessment ISO 14040	An assessment on the impact of the construction and use of a product on the environment, in compliance with standard ISO 14040, Environmental management, life-cycle assessment (LCA), principles and framework. For PowerPact, this assessment is carried out using the standardised EIME (Environmental Impact and Management Explorer) software, which makes possible comparisons between the products of different manufacturers. It includes all stages, i.e. manufacture, distribution, use and end of life, with set usage assumptions: ■ use over 20 years at a percent load of 80 % for 14 hours per day and 20 % for ten hours ■ according to the European electrical-energy model. It provides the information presented below. ■ Materials making up the product: composition and proportions, with a check to make sure no substances forbidden by the RoHS directive are included. ■ Manufacture: on Schneider Electric production sites that have set up an environmental management system certified ISO 14001. ■ Distribution: packaging in compliance with the 94/62/EC packaging directive (optimised volumes and weights) and optimised distribution flows via local centres. ■ Use: no aspects requiring special precautions for use. Power lost through Joule effect in Watts (W) must be < 0.02 % of total power flowing through the circuit breaker. Based on the above assumptions, annual consumption from 95 to 200 kWh. ■ End of life: products dismantled or crushed. For PowerPact, 81 % of materials can be recycled using standard recycling techniques. Less than 2 % of total weight requires special recycling.
Product environmental profile (PEP) Environmental indicators	Environmental indicators are also frequently used for the PEP (sheet available on request for PowerPact): ■ Depletion of natural resources ■ Depletion of energy ■ Depletion of water ■ Potential for atmospheric warming (greenhouse effect) ■ Potential for stratospheric ozone depletion ■ Creation of atmospheric ozone (ozone layer) ■ Acidification of air (acid rain) ■ Production of hazardous waste.
RoHS directive (Restriction of Hazardous substances)	European directive 2002/95/EC dated 27 January 2003 aimed at reducing or eliminating the use of hazardous substances. The manufacturer must attest to compliance, without third-party certification. Circuit breakers are not included in the list of concerned products, which are essentially consumer products. That not withstanding, Schneider Electric decided to comply with the RoHS directive. PowerPact products are designed in compliance with RoHS and do not contain (above the authorised levels) lead, mercury, cadmium, hexavalent chromium or flame retardants (polybrominated biphenyls PBB and polybrominated diphenyl ether PBDE).
Safety clearances	When installing a circuit breaker, minimum distances (safety clearances) must be maintained between the device and panels, bars and other protection systems installed nearby. These distances, which depend on the ultimate breaking capacity, are defined by tests carried out in accordance with standard IEC 60947-2.

Temperature derating	An ambient temperature varying significantly from 40 °C can modify operation of magnetic or thermal-magnetic protection functions. It does not affect electronic trip units. However, when electronic trip units are used in high-temperature situations, it is necessary to check the settings to ensure that only the permissible current for the given ambient temperature is let through.
Vibration withstand IEC 60068-2-6	Circuit breakers are tested in compliance with standard IEC 60068-2-6 for the levels required by merchant-marine inspection organisations (Veritas, Lloyd's, etc.): ■ 2 to 13.2 Hz: amplitude of ±1 mm ■ 13.2 to 100 Hz: constant acceleration of 0.7 g.
WEEE directive (Waste of Electrical and Electronic Equipment)	European directive on managing the waste of electrical and electronic equipment. Circuit breakers are not included in the list of concerned products. However, PowerPact products respect the WEEE directive.

Harmonics

Current harmonics	Non-linear loads cause harmonic currents that flow in the 50 Hz (or 60 Hz) distribution system. Total harmonic current is the sum of sinusoidal AC currents for which the rms values can be measured and broken down into: ■ the fundamental current at the 50/60 Hz frequency of the distribution system, with an rms value of IH_1 ■ harmonic currents with whole, odd multiples (3, 5, 7, etc.) of the 50/60 Hz frequency, called the third-order, fifth-order, etc. harmonics. For example, IH_3, the third-order harmonic at 150/180 Hz, IH_5, the fifth-order harmonic at 250/300 Hz, etc. The presence of harmonics in the system must be monitored and limited because it results in temperature rise, currents in the neutral (caused by the third-order harmonics and multiples), malfunctions of sensitive electronic devices, etc. Micrologic E trip units take into account harmonics up to order 15 in the THDI and THDU calculations.
Non-linear load	Systems producing harmonics are present in all industrial, commercial and residential sectors. Harmonics are caused by non-linear loads. A load is said to be non-linear when the current drawn does not have the same waveform as the supply voltage. Typically, loads using power electronics are non-linear. Examples of non-linear loads include computers, rectifiers, variable-speed drives, arc furnaces and fluorescent lighting.
Total harmonic distortion of current (THDI)	THDI characterises the distortion of the current wave by harmonics. It indicates the quantity of harmonics in the resulting waveform. It is expressed in percent. The higher the THDI, the more the current is distorted by harmonics. THDI should remain below 10 %. Above that level, there is said to be harmonic pollution that is considered severe when it rises above 50 %.
Total harmonic distortion of voltage (THDU)	THDU characterises the distortion of the voltage wave by harmonics. It indicates the quantity of harmonics in the resulting waveform. It is expressed in percent. The higher the THDU, the more the system voltage is distorted by harmonics. It is advised not to exceed 5 % for low-voltage systems.
Voltage harmonics	For each current harmonic IHk, there is a voltage harmonic UHk of the same order k, where the resulting voltage is the sum of the two waves. The voltage wave is therefore distorted with respect to the standard sinusoidal wave.

Measurements

Overvoltage category (OVC - Overvoltage category) IEC 60947-1. Annex H	Standard IEC 60664-1 stipulates that it is up to the user to select a measurement device with a sufficient overvoltage category, depending on the network voltage and the transient overvoltages likely to occur. Four overvoltage categories define the field of use for a device. ■ Cat. I. Devices supplied by a SELV isolating transformer or a battery. ■ Cat. II. Residential distribution, handheld or laboratory tools and devices connected to standardised 2P + earth electrical outlets (230 V). ■ Cat. III. Industrial distribution, fixed distribution circuits in buildings (main low voltage switchboards, rising mains, elevators, etc.). ■ Cat. IV. Utility substations, overhead lines, certain industrial equipment.

Protection

Instantaneous protection I (Ii)	This protection supplements Isd. It provokes instantaneous opening of the device. The pick-up is fixed (built-in). This value is always lower than the contact-repulsion level.
Long-time protection L (Ir)	Protection function where the Ir pick-up determines a protection curve similar to the thermal-protection curve (inverse-time curve I^2t). The curve is generally determined on the basis of the Ir setting which corresponds to a theoretically infinite tripping time (asymptote) and of the point at 6 Ir at which the tripping time depends on the rating.
Magnetic protection (Im)	Short-circuit protection provided by magnetic trip units (see this term). The pick-up setting may be fixed.
Neutral protection (IN)	The neutral is protected because all Circuit breaker poles are interrupted. The setting may be that used for the phases or specific to the neutral, i.e. reduced neutral (0.5 times the phase current) or OSN (oversized neutral) at 1.6 times the phase current. For OSN protection, the maximum device setting is limited to 0.63 In.
Thermal protection (Ir)	Overload protection provided by thermal trip units (see this term) using an inverse-time curve (I^2t).

G

Relays and auxiliary contacts

Auxiliary contact IEC 60947-1	"Contact included in an auxiliary circuit and mechanically operated by the switching device".
Break contact IEC 60947-1	"Control or auxiliary contact which is open when the main contacts of the mechanical switching device are closed and closed when they are open".
Make contact IEC 60947-1	"Control or auxiliary contact which is closed when the main contacts of the mechanical switching device are closed and open when they are open".
Relay (electrical) IEC 60947-1	"Device designed to produce sudden, predetermined changes in one or more electrical output circuits when certain conditions are fulfilled in the electrical input circuits controlling the device".
Relay module with static output	Output of a relay made up of a thyristor or triac electronic component. The low interrupting capacity means that a power relay is required. This is the case for the SDx outputs.

Switchgear

Circuit breaker IEC 60947-2 	"Mechanical switching device, capable of making, carrying and breaking currents under normal circuit conditions and also making, carrying for a specified time and breaking currents under specified abnormal circuit conditions such as those of short circuit". Circuit breakers are the device of choice for protection against overloads and short-circuits. Circuit breakers may, as is the case for PowerPact, be suitable for isolation.

Circuit breaker utilisation category IEC 60947-2	The standard defines two utilisation categories, A and B, depending on breaker discrimination with upstream breakers under short-circuit conditions. ■ Category A. Circuit breakers not specifically designed for discrimination applications. ■ Category B. Circuit breakers specifically designed for discrimination, which requires a short time-delay (which may be adjustable) and a rated short-time withstand current in compliance with the standard. PowerPact 125 to 600 circuit breakers are category A, however, by design, they provide discrimination with downstream devices (see the Complementary technical information guide).
Contactor IEC 60947-1 	"Mechanical switching device having only one position of rest, operated otherwise than by hand, capable of making, carrying and breaking currents under normal circuit conditions including operating overload conditions". A contactor is provided for frequent opening and closing of circuits under load or slight overload conditions. It must be combined and coordinated with a protective device against overloads and short-circuits, such as a circuit breaker.
Contactor utilisation categories IEC 60947-4-1	The standard defines four utilisation categories, AC1, AC2, AC3 and AC4 depending on the load and the control functions provided by the contactor. The class depends on the current, voltage and power factor, as well as contactor withstand capacity in terms of frequency of operation and endurance.
Current-limiting circuit breaker IEC 60947-2	"A Circuit breaker with a break-time short enough to prevent the short-circuit current reaching its otherwise attainable peak value".
Disconnector IEC 60947-3 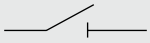	"Mechanical switching device which, in the open position, complies with the requirements specified for the isolating function". A disconnector serves to isolate upstream and downstream circuits. It is used to open or close circuits under no-load conditions or with a negligible current level. It can carry the rated circuit current and, for a specified time, the short-circuit current.

Trip units

Magnetic release	Release actuated by a coil or a lever. A major increase in the current (e.g. a short-circuit) produces in the coil or the lever a change in the magnetic field that moves a core. This trips the circuit breaker operating mechanism. Action is instantaneous. The pick-up setting may be adjustable.
Reflex tripping	PowerPact circuit breakers have a patented reflex-tripping system based on the energy of the arc and that is independent of the other protection functions. It operates extremely fast, before the other protection functions. It is an additional safety function that operates before the others in the event of a very high short-circuit.
Release IEC 60947-1	Device, mechanically connected to a mechanical switching device (e.g. a circuit breaker), which releases the holding means and permits the opening or the closing of the switching device. For circuit breakers, releases are often integrated in a trip unit.
Shunt trip (MX)	This type of release operates when supplied with current. The MX release provokes Circuit breaker opening when it receives a pulse-type or maintained command.
Thermal-magnetic trip unit	Trip unit combining thermal protection for overloads and magnetic protection.
Thermal release	Release in which a bimetal strip is heated by the Joule effect. Above a temperature-rise threshold that is a function of the current and its duration (I^2t curve = constant, which is representative of temperature rise in cables), the bimetal strip bends and releases the Circuit breaker opening mechanism. The pick-up setting may be adjustable.
Undervoltage release (MN)	This type of release operates when the supply voltage drops below the set minimum.

G

Life Is On | Schneider Electric

Schneider Electric Industries SAS

35, rue Joseph Monier
CS 30323
92506 Rueil Malmaison Cedex
France

RCS Nanterre 954 503 439
Capital social 896 313 776 €
www.schneider-electric.com

08-2016
ART119881

© 2016 - Schneider Electric. All Rights Reserved.
All trademarks are owned by Schneider Electric Industries SAS or its affiliated companies.
Document reference: LVPED216029EN

This document has been printed on recycled paper